APPLICATION:

This new 2500 series Raised Rib belt has particularly been developed for use in pasteurizer tunnels, warmers and coolers for cans and PET bottles. Design and material choice aimed at high loads and temperatures as usual in these applications. The System Plast 2500 series belt has an important novelty in the pin-clip locking system. It makes installation and maintenance a lot easier and copes with the expansion and contraction issues in the belt better than the usual systems. Off course the 2500 series is suitable for other applications, like off-line accumulation tables as well!

PRODUCT:

The System Plast 2500 series has a 2" pitch and offers high strength and great product stability due to the grid design. The standard material is polypropylene, suitable for the temperatures and chemicals common in pasteurizing.The transfer combs are available in two lengths to suit several machine designs and applications. The bolt/slot combination enables the combs to move freely when they have to follow the belt's expansion and contraction. Sprockets are available in several sizes as well and have a multi-angled shape that fits the underside of the belt offering the best possible support and traction. For the alternative applications, the 2500 series can be produced in materials like LFG - low friction acetal, NG – System Plast's special New Generation material and several other plastics.

QUALITY:

System Plast makes no compromises on quality and only uses the best available materials from first class sources. This policy, in combination with our in-house mould design and production ensure you the highest quality standard in the market! System Plast is ISO 9001 certified.

SYSTEM PLAST™

Regal Power Transmission Solutions
7120 New Buffington Road
Florence, KY 41042
Customer Service: 800-626-2120
Fax: 800-262-3292
Technical Service: 800-626-2093

www.RegalPTS.com

APPLICATION CONSIDERATIONS

The proper selection and application of power transmission products and components, including the related area of product safety, is the responsibility of the customer. Operating and performance requirements and potential associated issues will vary appreciably depending upon the use and application of such products and components. The scope of the technical and application information included in this publication is necessarily limited. Unusual operating environments and conditions, lubrication requirements, loading supports, and other factors can materially affect the application and operating results of the products and components and the customer should carefully review its requirements. Any technical advice or review furnished by Regal Beloit America, Inc. and its affiliates with respect to the use of products and components is given in good faith and without charge, and Regal assumes no obligation or liability for the advice given, or results obtained, all such advice and review being given and accepted at customer's risk.

For a copy of our Standard Terms and Conditions of Sale, Disclaimers of Warranty, Limitation of Liability and Remedy, please contact Customer Service at 1-800-626-2120. These terms and conditions of sale, disclaimers and limitations of liability apply to any person who may buy, acquire or use a Regal Beloit America Inc. product referred to herein, including any person who buys from a licensed distributor of these branded products.

System Plast and Regal are trademarks of Regal Beloit Corporation or one of its affiliated companies.

©2016 Regal Beloit Corporation, All Rights Reserved. MCB16054E • Form# 22475E • Printed in USA

REGAL™

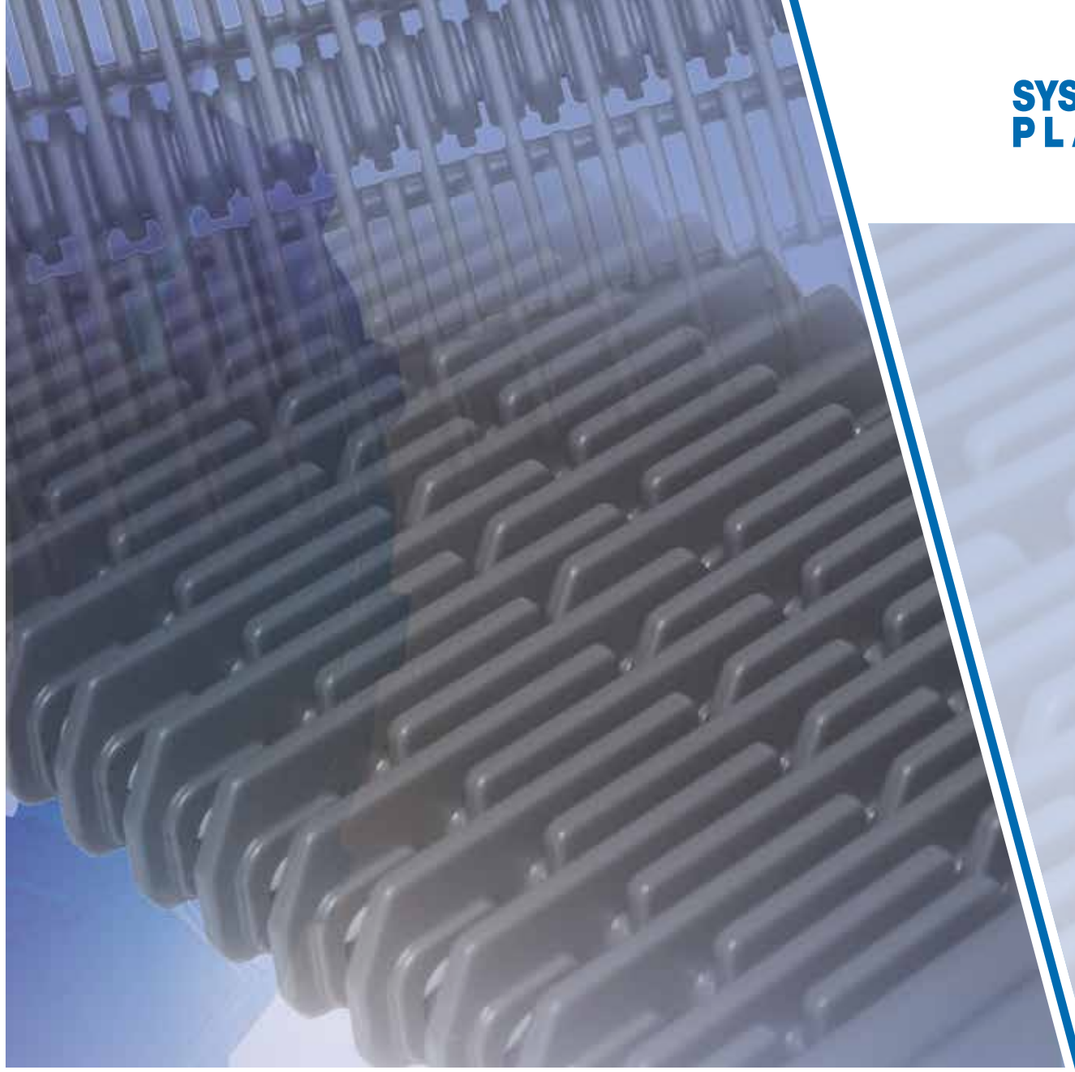

SYSTEM PLAST™

2500 SERIES 2" PITCH RAISED RIB BELT

For pasteurizers, warmers and coolers for cans and PET bottles

REGAL™

2500 RR RAISED RIB BELTS (PITCH 2" - 50.8 MM)

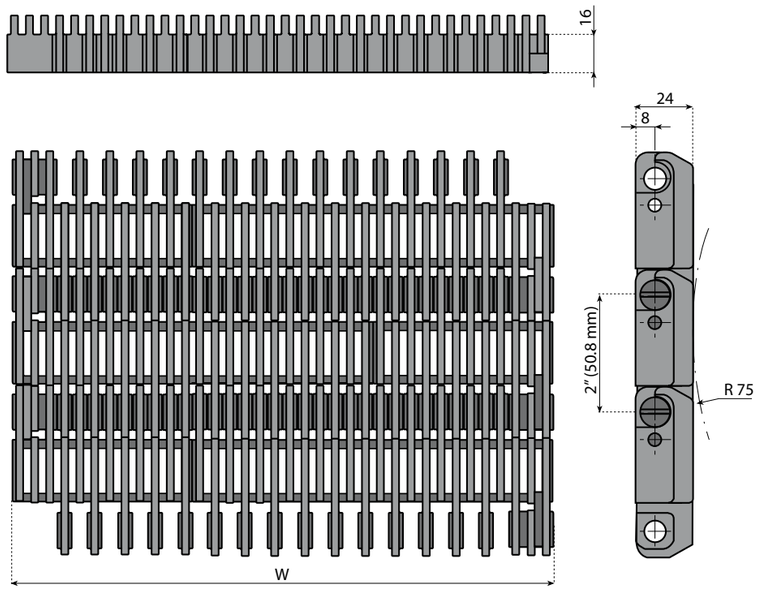

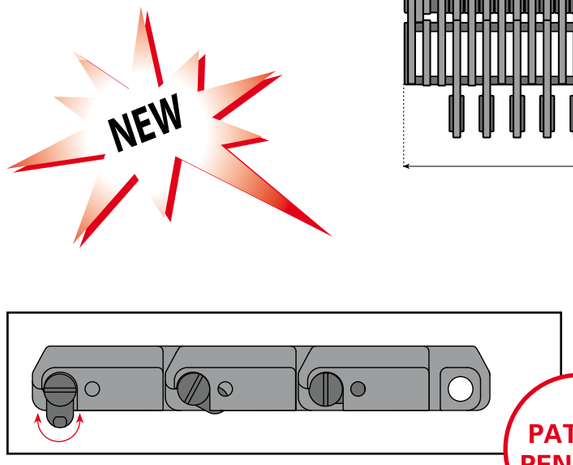

Backflex radius: 75 mm - 2.95 inch.
Max load capacity: 30.000 N/m - 2.056 lbs/ft
Weight: 9.2 Kg/m² - 218.3 lb/ft²
Standard length: 60 pitches (10 ft - 3.048 m)
Pin material: Polypropylene

Belt Material: Polypropylene (dark grey)
Open Surface: 27%.

Standard materials

PPG
Polypropylene

FOR BELTS AVAILABLE IN "LFG" MATERIAL JUST ADD "LFG" TO PART NUMBER (EXAMPLE "CODE 261252-LFG")

Width W		Belts Ref.	Code
inch	mm		
9.00	229	2500-0009RR	**261252**
12.00	305	2500-0012RR	**261253**
15.00	381	2500-0015RR	**261254**
18.00	457	2500-0018RR	**261255**
21.00	533	2500-0021RR	**261256**
24.00	610	2500-0024RR	**261257**
27.00	686	2500-0027RR	**261258**
30.00	762	2500-0030RR	**261259**
33.00	838	2500-0033RR	**261260**
36.00	914	2500-0036RR	**261261**
39.00	991	2500-0039RR	**261262**
42.00	1067	2500-0042RR	**261263**

Width W		Belts Ref.	Code
inch	mm		
45.00	1143	2500-0045RR	**261264**
48.00	1219	2500-0048RR	**261265**
51.00	1295	2500-0051RR	**261266**
54.00	1372	2500-0054RR	**261267**
57.00	1448	2500-0057RR	**261268**
60.00	1524	2500-0060RR	**261269**
63.00	1600	2500-0063RR	**261270**
66.00	1676	2500-0066RR	**261271**
69.00	1753	2500-0069RR	**261272**
72.00	1829	2500-0072RR	**261273**
75.00	1905	2500-0075RR	**261274**
78.00	1981	2500-0078RR	**261275**

Width W		Belts Ref.	Code
inch	mm		
81.00	2057	2500-0081RR	**261276**
84.00	2134	2500-0084RR	**261277**
87.00	2210	2500-0087RR	**261278**
90.00	2286	2500-0090RR	**261279**
93.00	2362	2500-0093RR	**261280**
96.00	2438	2500-0096RR	**261281**
99.00	2515	2500-0099RR	**261282**
102.00	2591	2500-0102RR	**261283**
105.00	2667	2500-0105RR	**261284**
108.00	2743	2500-0108RR	**261285**
111.00	2819	2500-0111RR	**261286**
114.00	2896	2500-0114RR	**261287**

Width W		Belts Ref.	Code
inch	mm		
117.00	2972	2500-0117RR	**261288**
120.00	3048	2500-0120RR	**261289**
123.00	3124	2500-0123RR	**261290**
126.00	3200	2500-0126RR	**261291**
129.00	3277	2500-0129RR	**261292**
132.00	3353	2500-0132RR	**261293**
135.00	3429	2500-0135RR	**261294**
138.00	3251	2500-0138RR	**261295**
141.00	3581	2500-0141RR	**261296**
144.00	3658	2500-0144RR	**261297**
147.00	3734	2500-0147RR	**261298**
150.00	3810	2500-0150RR	**261299**

Other widths available on request.

TRANSFER COMBS FOR RAISED RIB BELT 2"

TYPE 1

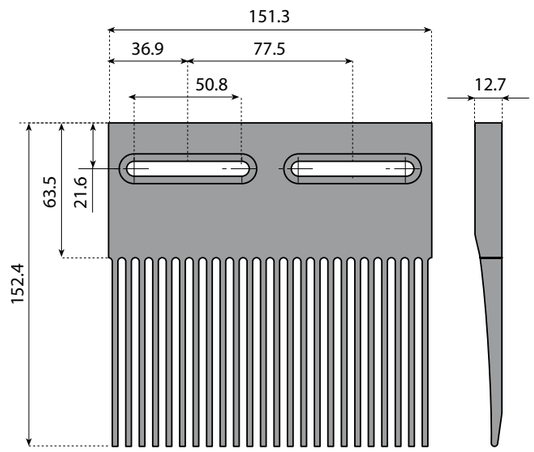

TYPE 2

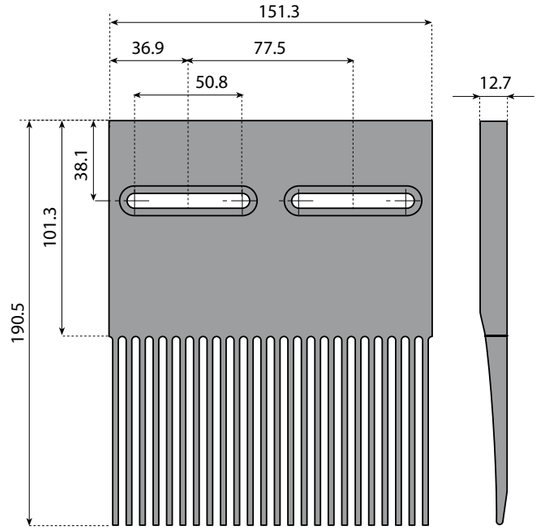

TYPE	CODE
1	14146
2	14147

Material: acetal, dark grey.
Note:
- Use shoulder screws (included) for fixing the comb to the conveyor construction.
- Two caps are supplied with each comb to cover the long holes.

x2 included

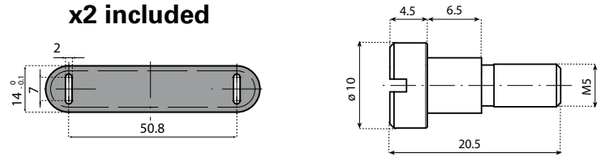

Shoulder screws are designed to fix the combs to the conveyor construction, but still allow for horizontal movement of the combs. This is required to follow expansion and contraction of the belt. Please consult Technical Support for optimum positioning of the screws.

SPROCKETS and IDLER WHEELS

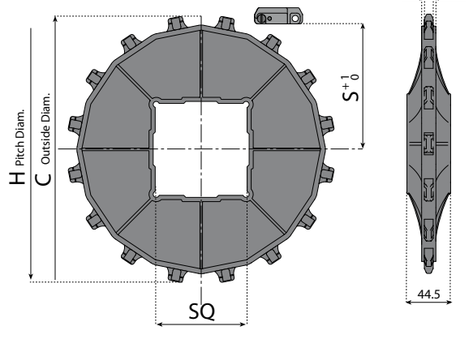

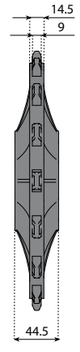

Z	C	H	S	STANDARD SPROCKETS ⊠ 65	⊠ 90	⊠ 120
16	260.40	261.60	118.20	**123209**	**123210**	**123211**

Material: acetal.