SYSTEM COMPONENTS, INC.

DISC COUPLINGS SERIES RP & RS

RU-STEEL ITALIA

1635 Stieve Drive, South Haven, MI 49090

P: 269-637-2191 F: 269-637-8377

sci-couplings.com

FLEXIBLE ALL STEEL COUPLINGS

Flexible all steel couplings type “RSP”.

Flexible all steel couplings type “RSL mc”.

Flexible all steel couplings type “RPA”.

Flexible all steel couplings type “RPD”.

SYSTEM COMPONENTS, INC.

ABOUT US

A Strong Tradition

RU-STEEL specializes in designing and manufacturing power-transmission couplings. Having been in business since the 1950's has enabled us to competitively create products and successfully assert our presence in the domestic and foreign markets.

An engagement towards quality and technology

Since the first coupling produced, RU-STEEL's philosophy has been designing and manufacturing a complete range of transmission couplings (from Nm 3 to 300.000, including "elastic couplings", "self-lubricating couplings", "flexible couplings", "super elastic coupling") in order to meet all customers' requests; This philosophy has become, for our engineering, a steady engagement in perfecting our products in order to guarantee the highest functionality, life and cost effectiveness to the user.

A Reliable Presence

By means of a steady production improvement, a careful marketing policy and a more and more qualified distribution and service network, at RU-STEEL we adhere closely to the requirements of our customers, who reward us daily with their faithfulness. RU-STEEL is therefore proud to present you our new catalogue about "Flexible all steel couplings".

INDEX

2 Characteristics

3 Coupling Selection

4 Coupling RS

5 Coupling RSD

6 Coupling RP

7 Coupling RPD

8 Coupling RPA

9 Coupling RSP

10 Coupling RP

11 Coupling RPD

12 Coupling RSP

13 Special Designs

14 General Guidelines for Assembly and Alignment

COUPLINGS WITH 4 BOLTS

COUPLINGS WITH 6 BOLTS

COUPLINGS WITH 8 BOLTS

SYSTEM COMPONENTS, INC.

CHARACTERISTICS

- High torque capacity with low weight
- Complete metallic construction (C45-AISI 304)
- Available in AISI 304 & AISI 316 Stainless Steel (by request)
- Accommodates axial misalignment with the possibility to adjust the axial stroke
- Limited axial thrust
- Torsionally Rigid and Torque Reversal
- Operates in both directions
- Operates in adverse environmental conditions
- High-temperature operation
- Accommodates for angular misalignment
- No lubrication required
- No maintenance required
- Long working Life
- Manufactured to API 610 or 671 upon request
- Non-Sparking Design Upon Request
- Balancing to ISO 1940-73

For the choice of the coupling size it is advisable to use the actual available power of the driving machine rather than the calculated adsorbed power of the driven machine, unless this latter is know not to be exceeded. After having determined the maximum HP that should be transmitted, these ones are brought back to 1 RPM of speed. Comparing the resulting values to the dates showed on the column "N/n" it had a first selection.

A) Determination of the coupling size with the choice of the values at 1 RPM

$$\text{Nominal Power} = \frac{\text{HP}}{\text{RPM (of operation)}} \times \text{service factor}$$

Alternative always using the maximum power and the RPM is possible find the coupling's nominal torque ad compare the resulting values to the dates showed on the column "nominal torque".

B) Determination of the coupling size with the choice of the nominal torque in in-lb.

$$\text{Nominal Torque} = \frac{\text{HP} \times 63025}{\text{RPM (of operation)}} \times \text{service factor}$$

The couplings listed in the catalog support a starting torque equal to twice the nominal torque, if it is higher than 2 the coupling must be chosen as follows:

Like A)

$$\text{Nominal Power} = \frac{\text{HP}}{\text{RPM (of operation)}} \times \frac{\text{starting torque}}{2 \text{ nominal torque}} \times \text{service factor}$$

Like B)

$$\text{Starting Torque} = \frac{\text{HP} \times 63025}{\text{RPM (of operation)}} \times \frac{\text{starting torque}}{2 \text{ nominal torque}} \times \text{service factor}$$

For direct in-line start motors, where the starting torque does not exceed twice the nominal torque, a service factor such as 1.5 must be selected. For higher starting torque use the above formulas.

A final check should be made to ensure that the maximum bore/hub bore dimension is adequate for the shaft .

	SERVICE FACTOR	Electric motor— Steam gas or turbine	Steam Engine Water turbine	Internal Combustion Engine
UNIFORM	**CONSTANT TORQUE** Centrifugal pump, light conveyors, alternators, centrifugal compressor	1.0	1.25	2.0
LIGHT	**SLIGHT TORQUE FLUCTUATION** Machine tools, screw compressors, screw pumps, liquid ring compressors	1.5	2.0	2.5
MEDIUM	**TORQUE FLUCTATION** Reciprocating pumps, low viscosity mixers, cranes	2.0	2.5	3.0
HIGH	**EXCEPTIONALLY HIGH TORQUE FLUCTUACTIONS** Rotary presses, reciprocating compressors, high viscosity mixers	2.5	3.0	4.0

The table gives a rough guide to service factors of general applications. For more specific figures it is recommended that AGMA 922-A96 or similar reference should be consulted, or reference made to our technical department.

RS

4 BOLT RANGE WITHOUT SPACER

Up to 2.5

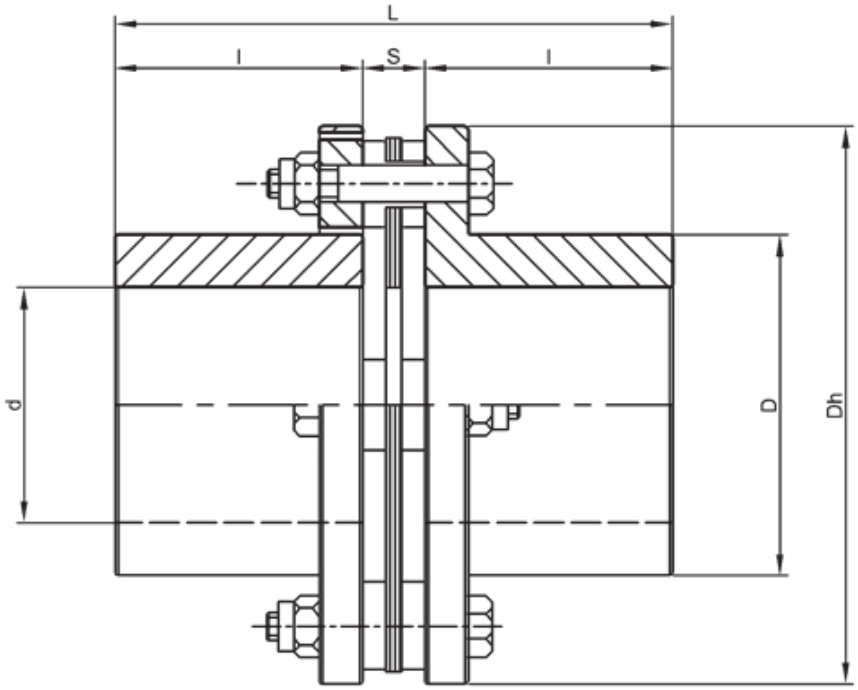

Size	Torque *in-lbs*	Max RPM	Max Bore	Dh	D1	L	l	S	Weight *lb.*	WR^2 lb.-in.^{2}
RS X	123	5,000	0.7	2.36	1.02	2.28	0.98	0.31	1.4	0.6
RS Z	238	5,000	0.98	2.75	1.37	2.75	1.18	0.39	2.4	1.3
RS 0	522	5,000	1.49	3.54	2.16	3.54	1.57	0.39	5.5	5.1
RS 1	1079	5,000	1.77	4.13	2.55	3.93	1.77	0.39	9.038	12.3
RS 2	2327	5,000	1.96	4.92	2.75	4.40	1.96	0.47	13	24.2
RS 2.5	3761	5,000	2.36	5.43	3.34	5.17	2.36	0.45	20	37.9
RS 3	4487	5,000	2.36	5.90	3.34	5.31	2.36	0.5	22	61
RS 5	5903	5,000	2.95	6.88	4.25	6.61	2.95	0.70	32	116
RS 7	7461	4,500	3.14	7.48	4.64	7.00	3.14	0.70	42	189
RS 12	11,187	4,500	3.54	8.46	4.96	7.87	3.54	0.78	60	347
RS 20	17,568	4,500	4.52	10.03	6.37	9.84	4.52	0.78	111	895

RSG Rendering with rubber flexible elements (patent 940-78)

*ALL DIMENSIONS IN INCHES UNLESS OTHERWISE SPECIFIED

RSD 4 BOLT RANGE WITH SPACER

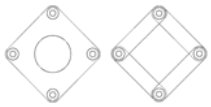

Up to 2.5

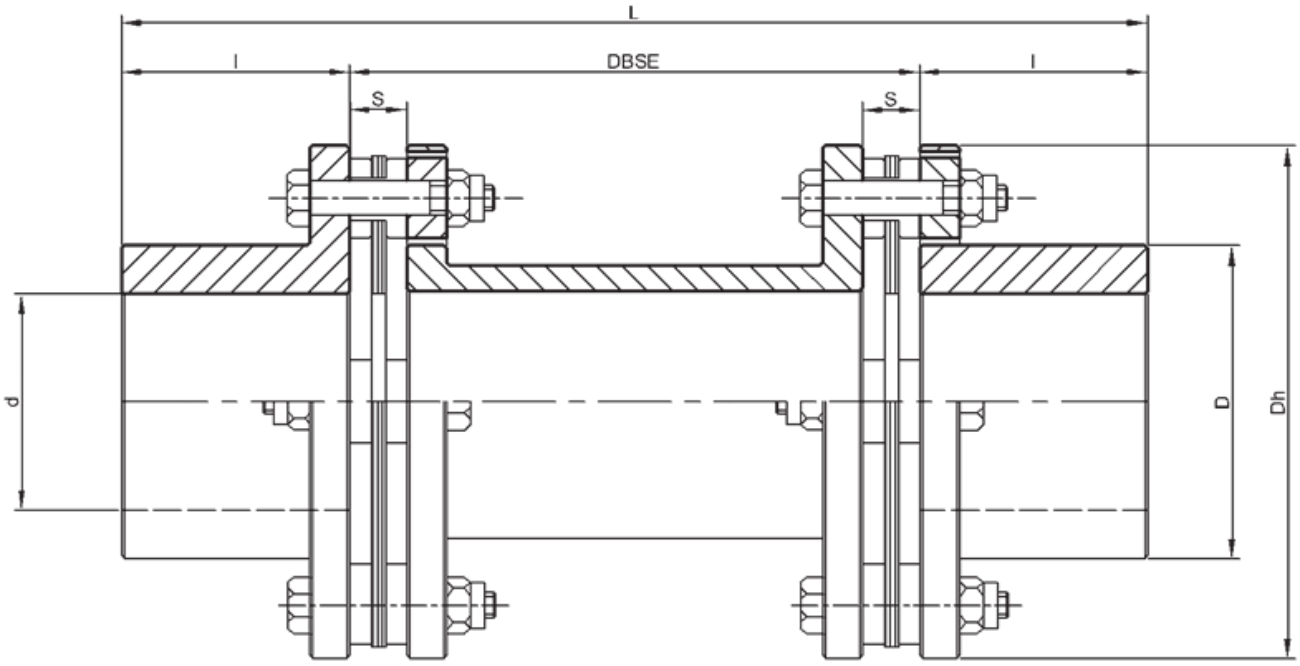

Size	Torque *in-lbs*	Max RPM	Max Bore	Dh	D1	L	l	DBSE	S	Weight *lb.*	WR^2 lb.-in.^{2}
RSD X	124	5,000	0.70	2.36	1.02	5.47	0.98	3.5	0.31	2	1.3
RSD Z	239	5,000	0.98	2.75	1.37	7.36	1.18	5	0.39	4	2.3
RSD 0	522	5,000	1.49	3.54	2.16	8.15	1.57	5	0.39	8	8.2
RD 1	1,080	5,000	1.77	4.13	2.55	8.54	1.77	5	0.39	13	21.5
RSD 2	2,328	5,000	1.96	4.92	2.75	8.94	1.96	5	0.47	18	43.1
RSD 2.5	3,762	5,000	2.36	5.43	3.34	9.72	2.36	5	0.45	29	73
RSD 3	4,487	5,000	2.36	5.90	3.34	9.72	2.36	5	0.59	31	109
RSD 5	5,903	5,000	2.95	6.89	4.25	12.91	2.95	7	0.70	43	188
RSD 7	7,461	4,500	3.15	7.48	4.64	13.30	3.15	7	0.70	57	316
RSD 12	11,187	4,500	3.54	8.46	4.96	14.09	3.54	7	0.78	86	596
RSD 20	17,569	4,000	4.52	10.03	6.37	16.06	4.52	7	0.78	147	1448

RSGD Rendering with rubber flexible elements (patent 940-78)

*ALL DIMENSIONS IN INCHES UNLESS OTHERWISE SPECIFIED

RP

6 BOLT RANGE WITHOUT SPACER

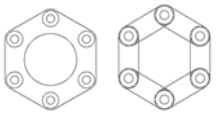

Up to 260

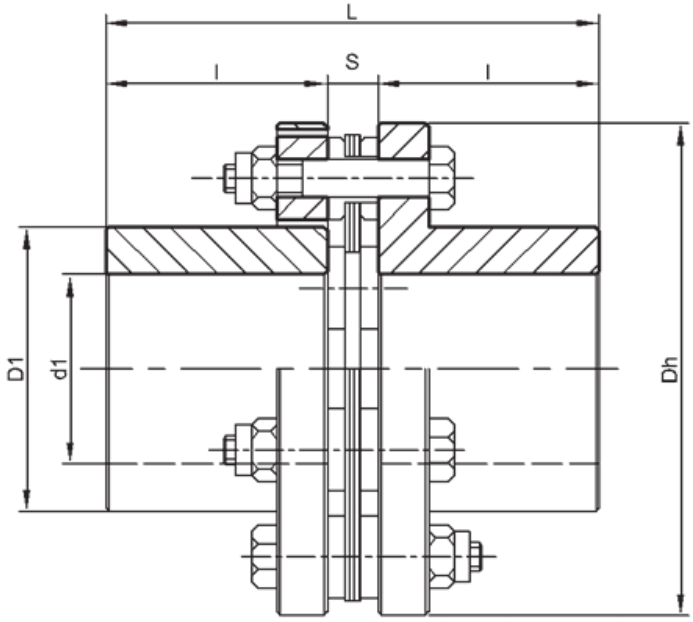

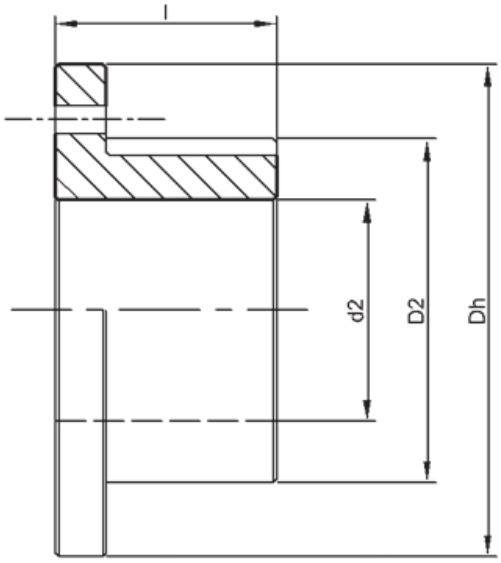

Mozzo "G"
Hub "G"

Size	Torque in-lbs	Max RPM	Max Bore	Dh	D1	L	l	S	Weight lb.	WR^2 lb.-in.^{2}	Hub "G"	
											d2 max	D2
RP 10	867	11,000	1.18	3.07	1.77	3.07	1.37	0.31	2.64	2.28	1.37	2.04
RP 15	1,301	10,800	1.49	3.54	2.16	3.46	1.57	0.31	5.07	5.53	1.73	2.51
RP 30	2,602	10,600	1.73	4.33	2.55	3.93	1.77	0.39	8.37	14.07	1.96	2.95
RP 70	6,080	10,300	1.96	5.31	2.95	4.80	2.16	0.47	13.44	31.81	2.28	3.46
RP 110	9,549	10,000	2.44	6.29	3.62	5.39	2.44	0.51	21.82	38.61	2.75	4.13
RP 170	14,763	9,800	2.95	7.08	4.40	6.06	2.75	0.55	32.62	132.89	3.34	4.92
RP 260	22,578	9,500	3.34	8.07	5.11	7.67	3.54	0.5	54.01	279.35	3.74	5.7
RP 400	34,730	9,000	3.54	8.85	5.31	9.52	4.33	0.86	77.16	478.88	4.13	6.1
RP 700	60,778	8,500	4.13	9.84	6.10	10.03	4.52	0.98	97	912.04	4.72	7.08
RP 900	78,143	7,500	4.52	11.64	6.69	10.55	4.72	1.10	145.5	1603.02	5.11	7.67
RP 1200	104,190	6,500	5.11	12.40	7.67	12.28	5.51	1.25	205.03	2581.87	5.91	8.85
RP1500	130,238	6,000	5.70	13.18	8.26	13.07	5.90	1.25	249.12	3805.36	6.49	9.64

*ALL DIMENSIONS IN INCHES UNLESS OTHERWISE SPECIFIED

RPD

6 BOLT RANGE WITH SPACER

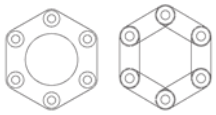

Up to 260

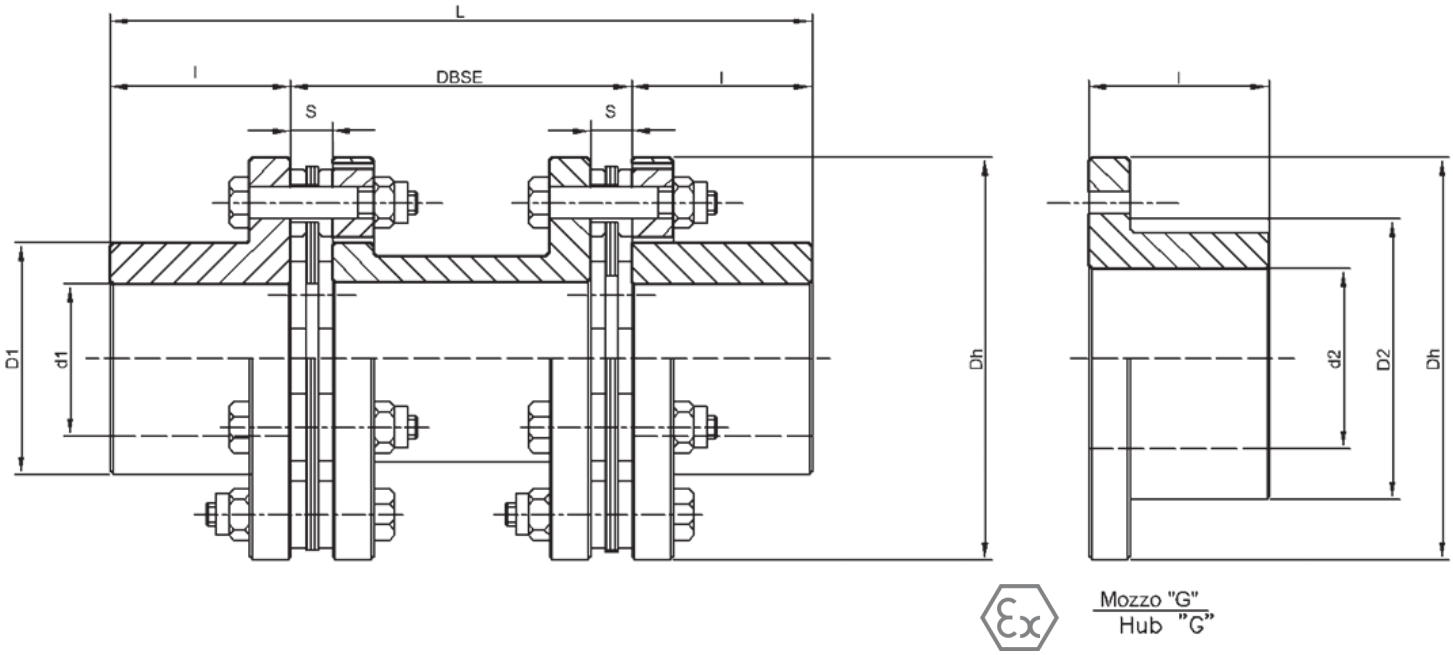

Size	Torque in-lbs	Max RPM	Max Bore	Dh	D1	L	l	DBSE	S	Weight lb.	WR^2 lb.-in.^{2}	Hub "G" d2 max	Hub "G" D2
RPD 10	867	11,000	1.18	3.07	1.77	6.26	1.37	3.5	0.31	4	3.17	1.38	2.05
RPD 15	1,301	10,800	1.49	3.54	2.16	8.15	1.57	5	0.31	7	9.70	1.73	2.52
RPD 30	2,602	10,600	1.73	4.33	2.55	7.04	1.77	3.5	0.39	13	25.28	1.97	2.95
RPD 70	6,080	10,300	1.96	5.31	2.95	9.33	2.16	5	0.47	20	57.40	2.28	3.47
RPD 110	9,550	10,000	2.44	6.29	3.62	11.88	2.44	7	0.51	32	60.51	2.76	4.13
RPD 170	14,763	9,800	2.95	7.08	4.40	10.51	2.75	5	0.55	46	222.35	3.35	4.92
RPD 260	22,578	9,500	3.34	8.07	5.11	14.09	3.54	7	0.59	73	450.31	3.74	5.71
RPD 400	34,730	9,000	3.54	8.85	5.31	15.66	4.33	7	0.86	106	807.81	4.13	6.1
RPD 700	60,778	8,500	4.13	9.84	6.10	16.06	4.52	7	0.98	139	1571.72	4.72	7.09
RPD 900	78,143	7,500	4.52	11.61	6.69	16.45	4.72	7	1.10	211	2799.55	5.12	7.68
RPD 1200	104,191	6,500	5.11	12.40	7.67	19.02	5.51	8 OR 9	1.26	290	4329.55	5.91	8.86
RPD 1500	130,239	6,000	5.70	13.18	8.26	20.81	5.90	9 OR 10	1.26	359	6475.54	6.5	9.65

*ALL DIMENSIONS IN INCHES UNLESS OTHERWISE SPECIFIED

RPA API 6 BOLT RANGE WITH ADAPTORS

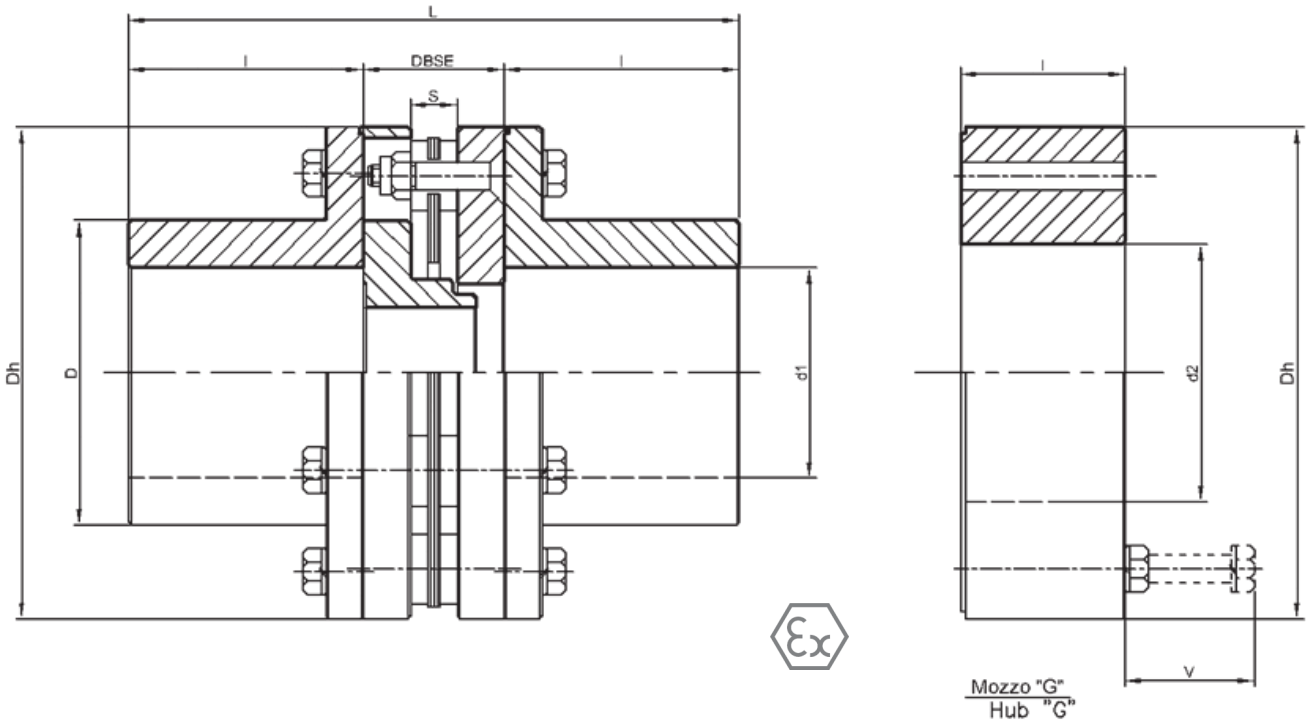

Size	Torque in-lbs	Max RPM	Max Bore	Dh	D1	L	l	DBSE	S	Weight lb.	WR^2 lb.-in.^{2}	Hub "G" d2 max	Hub "G" D2
RPA 0010	867	11,000	1.37	3.07	1.96	3.85	1.37	1.1	0.31	5.5	6.49	1.89	1.96
RPA 0015	1301	10,800	1.65	3.54	2.36	4.25	1.57	1.1	0.31	6.6	8.88	2.17	2.17
RPA 0030	2602	10,600	1.88	4.33	2.75	4.88	1.77	1.33	0.39	10.14	23.3	2.95	2.59
RPA 0070	6080	10,300	2.55	5.31	3.54	5.9	2.16	1.57	0.47	19.18	62.02	3.62	2.99
RPA 0110	9549	10,000	3.14	6.29	4.41	6.73	2.4	1.85	0.51	28.2	124.89	4.13	3.46
RPA 0170	14,763	9,800	3.7	7.08	5.19	7.4	2.75	1.88	0.55	44.5	257.21	4.72	3.85

*ALL DIMENSIONS IN INCHES UNLESS OTHERWISE SPECIFIED

RSP API 6 BOLT RANGE WITH SPACER AND ADAPTORS

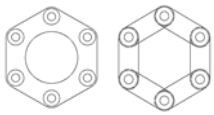

Up to 0260

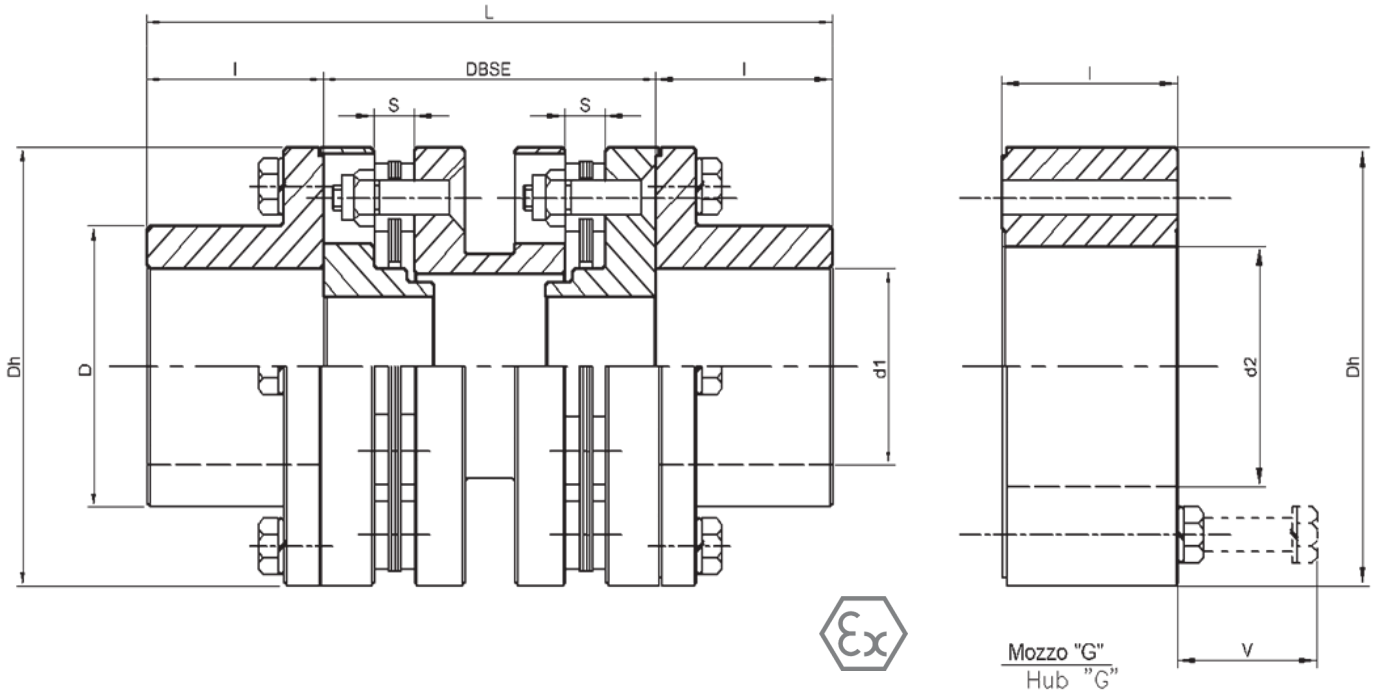

Size	Torque *in-lbs*	Max RPM	Max Bore	Dh	D1	L	I	DBSE	S	Weight *lb.*	WR^2 lb.-in.^{2}	Hub "G" d2 max	Hub "G" D2
RSP 0010	867	11,000	1.378	3.071	1.97	7.76	1.378	5	0.315	6	4.681	1.89	1.97
RSP 0015	1,301	10,800	1.654	3.543	2.36	8.15	1.575	5	0.315	9	12.814	2.17	2.17
RSP 0030	2,602	10,600	1.89	4.331	2.76	8.54	1.772	5	0.394	16	35.436	2.95	2.59
RSP 0070	6,080	10,300	2.559	5.315	3.54	9.33	2.165	5 OR 7	0.472	30	92.161	3.62	2.99
RSP 0110	9,550	10,000	3.15	6.299	4.41	9.88	2.441	5 OR 7	0.512	51	219.553	4.13	3.46
RSP 0170	14,763	9,800	3.701	7.087	5.2	10.51	2.756	5 OR 7	0.551	69	380.57	4.72	3.86
RSP 0260	22,578	9,500	4.331	8.071	6.1	12.09	3.543	5 OR 7	0.591	108	778.67	-	-
RSP 0400	34,730	9,000	4.646	8.858	6.5	15.66	4.331	7 OR 8	0.866	151	1247.267	-	-
RSP 0700	60,778	8,500	4.921	9.843	6.89	16.06	4.528	7 OR 8	0.984	187	2342.471	-	-
RSP 0900	78,143	7,500	5.512	11.614	7.8	16.45	4.724	7 OR 8	1.102	257	3140.039	-	-
RSP 1200	104,191	6,500	6.102	12.402	8.86	19.02	5.512	8 OR 9	1.26	334	5855.324	-	-
RSP 1500	130,239	6,000	6.693	13.189	9.45	20.81	5.906	9 OR 10	1.26	394	7938.09	-	-

*ALL DIMENSIONS IN INCHES UNLESS OTHERWISE SPECIFIED

RP

8 BOLT RANGE WITHOUT SPACER

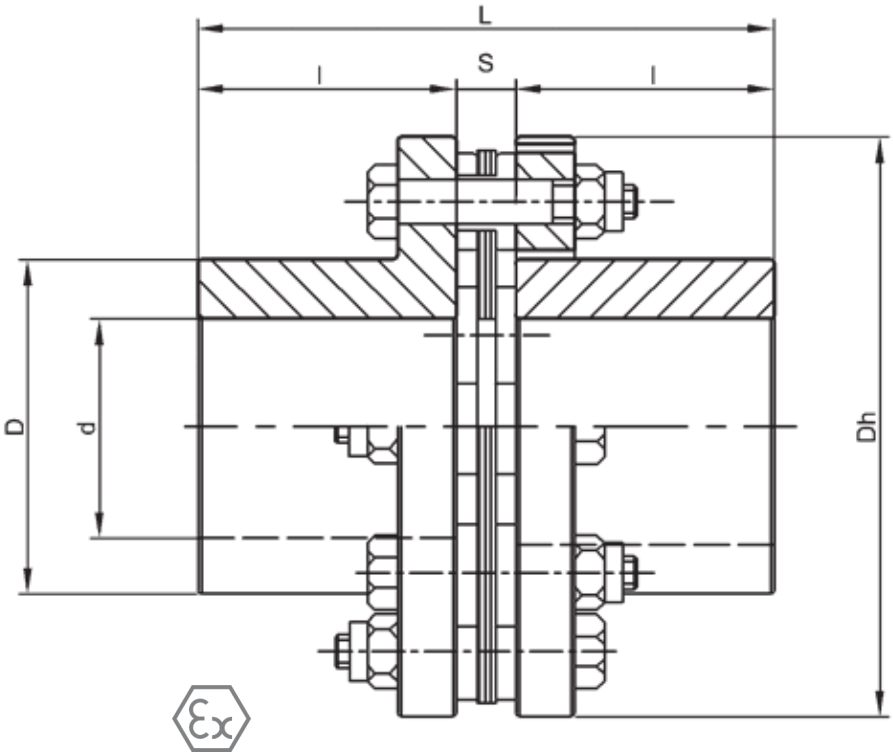

Size	Torque in-lbs	Max RPM	Max Bore	Dh	D1	L	l	S	Weight lb.	WR^2 lb.-in.^{2}
RP 2000	173,651	5,800	5.31	12.59	7.48	13.07	5.90	1.25	214	2,613
RP 2500	217,064	5,500	6.10	13.77	8.58	13.93	6.29	1.33	282	4,184
RP 3500	303,890	5,000	6.88	15.15	9.84	15.62	7.08	1.45	351	6,657
RP 5000	434,129	4,500	7.48	16.73	10.62	16.41	7.48	1.45	463	10,631
RP 6500	564,367	4,000	8.07	17.91	11.41	17.40	7.87	1.65	573	15,070
RP 8000	694,606	3,900	8.66	18.7	12.20	18.97	8.66	1.65	730	21,754
RP 10000	868,258	3,700	9.64	20.66	13.77	19.76	9.05	1.65	981	34,179
RP 13000	1,128,735	3,400	10.82	22.44	15.35	21.49	9.84	1.81	1268	51,688
RP 16000	1,389,213	3,100	12.20	25.19	18.30	23.07	10.62	1.81	1539	76,326
RP 20000	1,736,516	2,900	12.79	26.18	18.50	24.01	11.02	1.96	1753	91,539
RP 25000	2,170,645	2,800	14.17	28.34	20.47	24.80	11.41	1.96	1944	104,285
RP 30000	2,604,774	2,600	15.74	32.48	23.42	26.69	12.20	2.28	2189	130,433

*ALL DIMENSIONS IN INCHES UNLESS OTHERWISE SPECIFIED

RPD

8 BOLT RANGE WITH SPACER

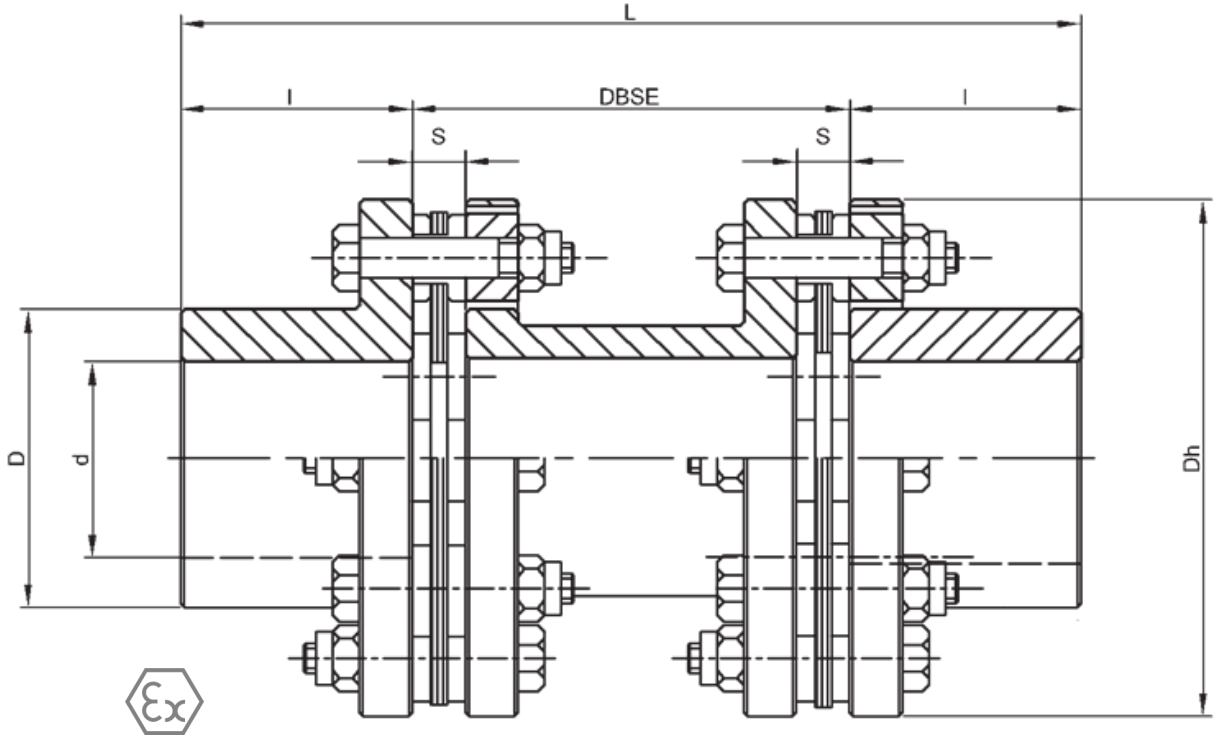

Size	Torque in-lbs	Max RPM	Max Bore	Dh	D	L	I	DBSE	S	Weight lb.	WR^2 lb.-in.^{2}
RPD 2000	173,652	5,800	5.31	12.59	7.48	20.81	5.90	9	1.26	304	4,349
RPD 2500	217,065	5,500	6.10	13.78	8.58	21.59	6.29	9	1.33	385	6,745
RPD 3500	303,891	5,000	6.89	15.15	9.84	24.17	7.08	10	1.45	462	10,487
RPD 5000	434,129	4,500	7.48	16.73	10.63	24.96	7.48	10	1.45	607	16,621
RPD 6500	564,368	4,000	8.07	17.91	11.42	27.74	7.87	12	1.65	750	23,609
RPD 8000	694,607	3,900	8.66	18.70	12.2	29.32	8.66	12	1.65	900	33,468
RPD 10000	868,259	3,700	9.64	20.66	13.78	30.11	9.05	12	1.65	1203	51,213
RPD 13000	1,128,736	3,400	10.82	22.44	15.35	33.68	9.84	14	1.81	1483	75,355
RPD 16000	1,389,214	3,100	12.20	25.19	18.31	35.26	10.63	14	1.81	1753	106,602
RPD 20000	1,736,517	2,900	12.79	26.18	18.5	36.04	11.02	14	1.96	1978	126,654
RPD 25000	2,170,646	2,800	14.17	28.34	20.47	36.83	11.41	14	1.96	2167	143,962
RPD 30000	2,604,776	2,600	15.74	32.48	23.43	40.77	13.38	14	2.28	2488	180,354

*ALL DIMENSIONS IN INCHES UNLESS OTHERWISE SPECIFIED

RSP API 8 BOLT RANGE WITH SPACER AND ADAPTORS

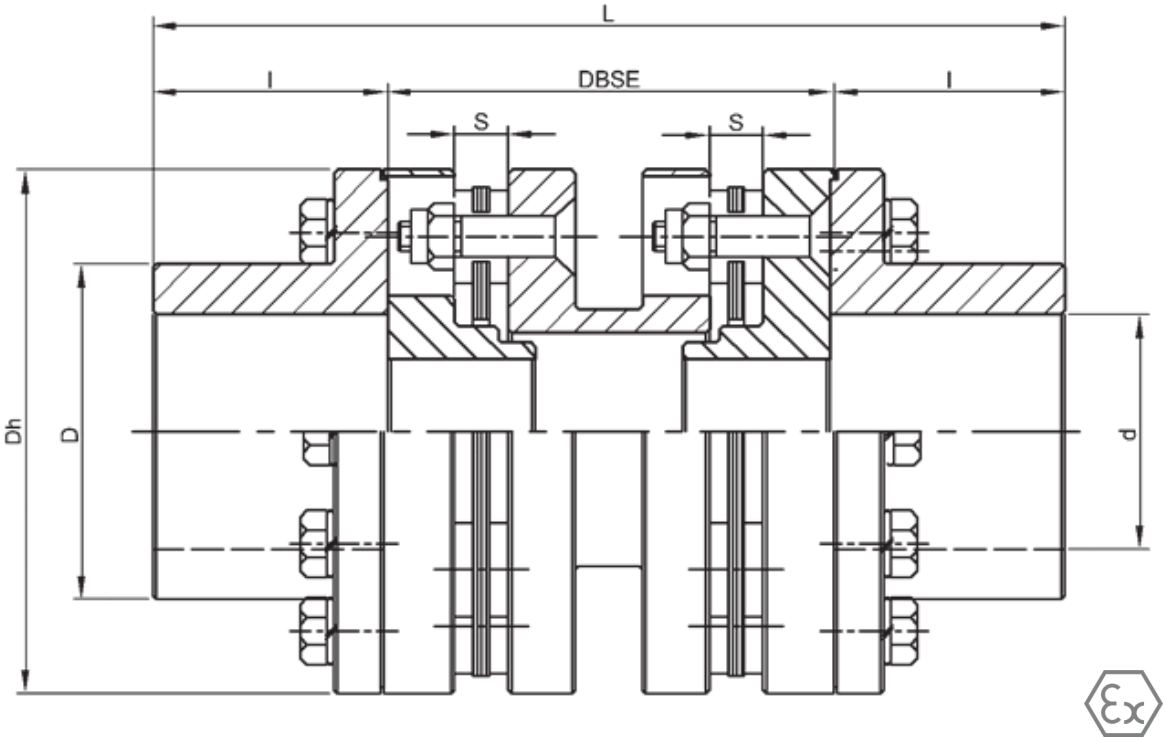

Size	Torque *in-lbs*	Max RPM	Max Bore	Dh	D1	L	I	DBSE	S	Weight *lb.*	WR^2 lb.-in.^{2}
RSP 2000	173,652	5800	6.29	12.59	8.85	20.81	5.90	9	1.26	348	5,658
RSP 2500	217,065	5500	7.08	13.78	9.64	21.59	6.29	9	1.33	464	8,747
RSP 3500	303,891	5000	7.48	15.15	10.63	24.17	7.08	10	1.45	574	13,771
RSP 5000	434,129	4500	8.07	16.73	11.41	24.96	7.48	10	1.45	752	21,948
RSP 6500	564,368	4000	9.05	17.91	12.79	27.74	7.87	12	1.65	728	30,587
RSP 8000	694,607	3900	10.23	18.70	14.17	29.32	8.66	12	1.65	1085	43,510
RSP 10000	868,259	3700	11.22	20.66	15.74	30.11	9.05	12	1.65	1406	64,857
RSP 13000	1,128,736	3400	12.40	22.44	17.32	33.68	9.84	14	1.81	1729	95,643
RSP 16000	1,389,214	3100	14.17	25.19	19.88	35.26	10.63	14	1.81	2152	136,529
RSP20000	1,736,517	2900	14.76	26.18	20.47	36.04	11.02	14	1.96	2405	161,768
RSP 25000	2,170,646	2800	15.94	28.34	22.63	36.83	11.41	14	1.96	2622	183,638
RSP 30000	2,604,776	2600	17.32	32.48	25.98	40.77	13.38	14	2.28	3276	243,852

*ALL DIMENSIONS IN INCHES UNLESS OTHERWISE SPECIFIED

SPECIAL DESIGNS

Steel spacer design, fit to any applications. Also available in stainless steel AISI 304, AISI 316. These designs may be achieved with the RPD, RSP and RSL series.

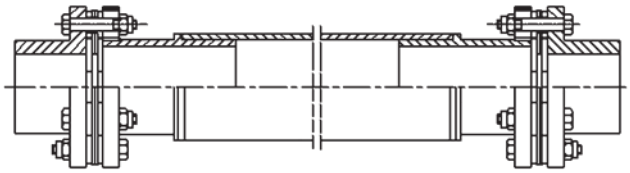

Steel spacer in carbon fiber style, especially suitable to applications in cooling towers. Requested applications are provided in stainless steel AISI 304, AISI 316, too. Such designs may be achieved with the RPD, RSP and RSL series.

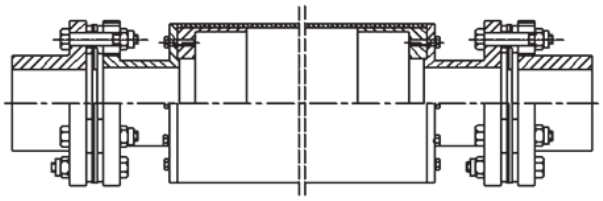

Coupling flange style. These are achieved with RPD

and RSP series.

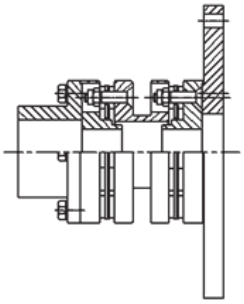

Compact style with a milled spacer allowing the assembly of two flexible elements limiting the distance between the shaft-ends. Such an application is available in the RPD and RSP series.

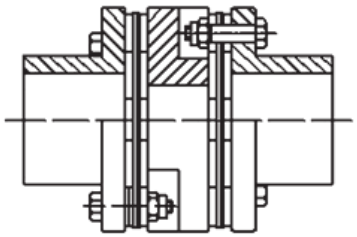

Vertically mounted styles can be found in the RPD and RSP series.

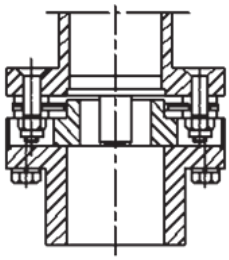

GENERAL GUIDELINES FOR ASSEMBLY AND ALIGNMENT

Precise alignments, when assembling the coupling, will allow for variations of conditions during operation and thus ensure a long, trouble free, working life for the coupling.

Straight bored hubs should be fitted so that the shaft end is flush with the flanges' faces: the distance between the flanges will match with the "S" value for one-flexible element couplings, and with the complete "DBSE" value with two-flexible elements couplings. Once the machines are ready to start, it is necessary to begin with a first alignment placing a line on the hubs' flanges every 90°. (fig.1). Doing so both a vertical and an horizontal alignment is approximately obtained. After that, it is suggested to check the axial alignment which must be within the limits below.

Axial alignment

One flexible-element couplings:

4 Bolt couplings: -0\+0.020 "S" value

6 Bolt couplings: -0\+0.016 "S" value

8 Bolt couplings: -0\+0.010 "S" value

Two-flexible elements couplings:

4 Bolt couplings:-0\+0.040"DBSE" value

6 Bolt couplings: -0\+0.032 "DBSE" value

8 Bolt couplings: -0\+0.020 "DBSE" value

Radial and angular alignment

At this point it is important to mount the flexible element assembly, or the flexible elements and spacer for couplings with large "DBSE", making sure to tighten the nuts to their corresponding bolts.

Use a dial indicator in order to achieve the minimum distance between the flanges' faces, then reset it, note the maximum distance, divide results by the flange's diameter. These results should not exceed the limits below.

4 Bolt couplings: 0.00015'' / inch. of the flange's diameter

6 Bolt couplings: 0.00012'' / inch. of the flange's diameter

8 Bolt couplings: 0.00008'' / inch. of the flange's diameter

Alternatively, carefully note using a centesimal gauge the distance between the flanges' internal surfaces (fig.3) obtaining the maximum distance A and the minimum distance B. With

the D flange's diameter:

Maximum Misalignment in mm, must be within the values above. (Being sure to convert units)

When working with two-element couplings repeat the operation on both coupling's sides, or, alternatively, block one side of the coupling by inserting a grinding gauge equal to "S" value, tighten that side with hardware completely stiffening one side.

Now proceed, as indicated above, checking the other side of the coupling, noting that the values should be double.

Such procedures allow both an angular and a parallel misalignment's checks, but they shouldn't be regarded as assembly or maintenance instructions whatsoever.

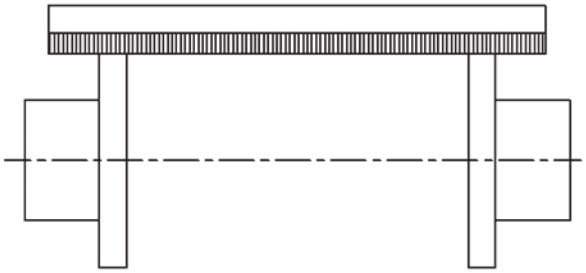

FIGURE 1

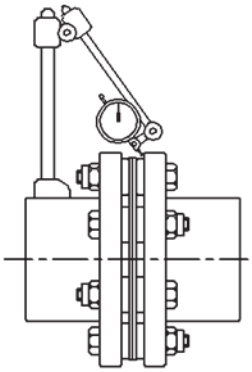

FIGURE 2

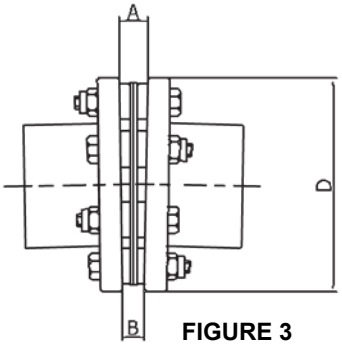

FIGURE 3

OTHER COUPLINGS IN PRODUCTION: