QUALITY • SERVICE • MANUFACTURING • QUALITY • SERVICE • MANUFACTURING • QUALITY • SERVICE • MANUFACTURING • QUALITY • SERVICE • MANUFACTU

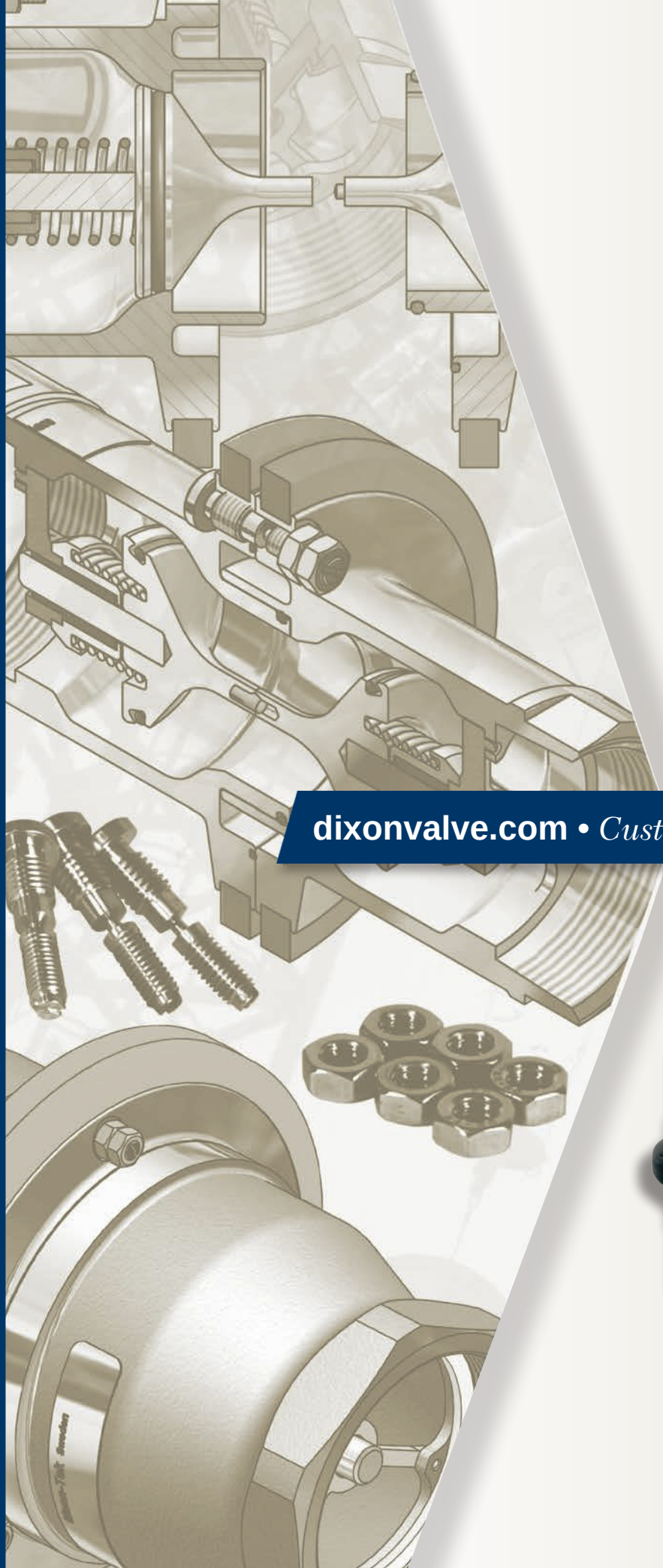

DIXON

The Right Connection®

Dry Disconnects and Breakaways

dixonvalve.com • *Customer Service:* **877.963.4966**

Table of Contents

Mann-Tek design

Dry Disconnect....4 - 5
Dry Aviation....6 - 7
Dry Gas....8 - 10
Ratings & Options....11 - 12

Bayloc™ design

Dry Disconnect....13 - 15
Actuator style....26

Bayonet design

Dry Disconnect....16 - 17

Safety Break-Aways

Industrial version (breaking bolt design)....18 - 19
Marine version (breaking bolt design)....20 - 21
Connection combinations & Options....22 - 23
How it works....24
Ratings & Kits....24 - 25

API fittings

Coupler....27

Hose Coupling Safety

Dixon's couplings and retention devices are designed to work safely for their intended use. The selection of the proper hose, coupling and retention device, and the proper application of the coupling to the hose are of utmost importance.

Users must consider the size, temperature, application, media, pressure and hose and coupling manufacturer's recommendations when selecting the proper hose assembly components. Dixon recommends that all hose assemblies be tested in accordance with the Association for Rubber Products Manufacturer's (ARPM) recommendations and be inspected regularly (before each use) to ensure that they are not damaged or have become loose. Visit ARPMINC.com for more information.

Where safety devices are integral to the coupling, they must be working and utilized. The use of supplementary safety devices such as safety clips or safety cables are recommended.

If any problem is detected, couplings must be removed from service immediately.

Dixon is available to consult, train and recommend the proper selection and application of all fittings we sell. We strongly recommend that distributors and end users make use of Dixon's Testing and Recommendation Services. Call 877.963.4966 or click dixonvalve.com to learn more.

Features & Benefits

Dry disconnect couplings are designed for the quick and spill free connection and disconnection of hoses and pipelines when transferring expensive hazardous product that is costly to clean up, reprocess or dispose of. Dry disconnects are used by producers of ink, adhesives, fatty acids, pharmaceuticals, liquid soaps, petroleum, chemicals, agricultural and a wide variety of common caustic and specialty acids.

- easy to handle - push and turn - free flow, turn and pull - closed
- time saving - no need to drain hoses or pipe systems
- economical - no loss or spillage of liquids at connection or disconnection
- safety - the valve cannot be opened until the unit is coupled
- environment friendly - accidental spillage eliminated when properly used
- safe and reliable - due to rugged construction
- product life - uncomplicated design and high quality materials ensures long product life
- selectivity - To avoid product contamination, selective versions of the couplers and adapters are available. Contact the factory for further information.
- produced according to NATO standard STANAG 3756 and ATOFINA SGM 2049.TUY.C.
- interchanges with Avery Hardoll and Todo-matic®
  STANAG 3756
- Working Pressure (at ambient temperature 70°F) -
  aluminum: **230 PSI** up to 4"
  brass/ gunmetal *: **230 PSI** up to 4"
  stainless steel: **360 PSI**
- Optional seals:
  EPDM
  NBR - nitrile
  FFPM
  FKM

* *produced to U.S. government bronze specification G*

How It Works

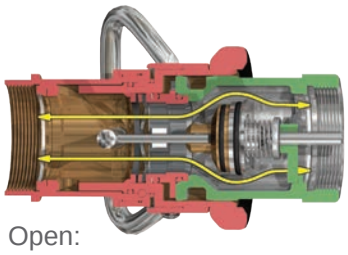

Open:

- Push and turn
  it's coupled - full flow

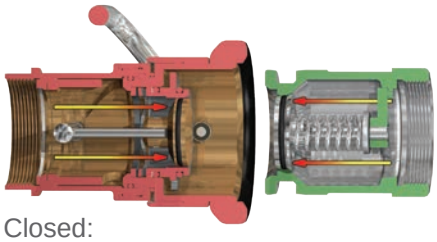

Closed:

- Turn and pull
  it's released - no spillage

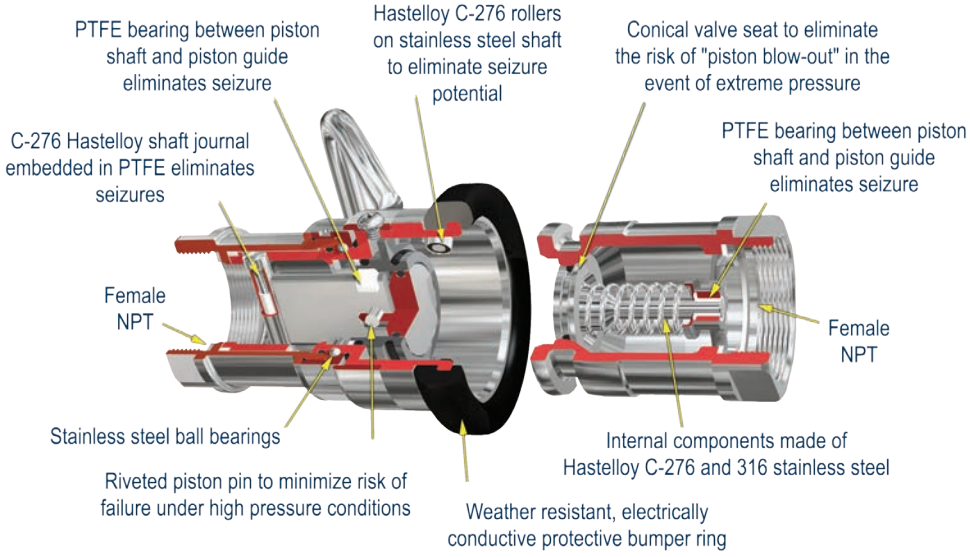

DDC200SS pictured

female NPT x coupler - aluminum
¾" and 1" design

female NPT x coupler - brass
1½" and 2" design

female NPT x coupler - stainless steel
3" design

female NPT x coupler - aluminum
4" design

female NPT x coupler - aluminum
6" design

150# ASA flange x coupler - stainless steel
2" design

150# ASA flange x coupler - stainless steel
3" design

TTMA flange x coupler - aluminum
4" design

composite plug

Dry Quick Disconnects

Coupler - Hose Unit

Features:

- coupler has built-in swivel
- stainless steel ball bearings
- shaft journal is stainless steel embedded in PTFE to eliminate seizure
- riveted piston pin to minimize the risk for failure under extreme pressure conditions
- the protective ring is a specially formulated, weather resistant and electrically conductive rubber compound
- stainless steel couplers: rollers are Hastelloy C276 on the stainless steel shaft
- aluminum and brass couplers: rollers are aluminum-bronze on the stainless steel shaft
- for information on repair kits visit us on-line at dixonvalve.com

coupler x female NPT with FKM (FPM) seals

Female NPT	Body Size	*316 Stainless Steel*	*Aluminum*	*Brass / Gunmetal* [1]
¾"	56 mm	***DDC075SS***	***DDC075AL***	***DDC075BR***
1"	56 mm	***DDC100SS***	***DDC100AL***	***DDC100BR***
1½"	70 mm	***DDC150SS***	***DDC150AL***	***DDC150BR***
2"	70 mm	***DDC200SS***	***DDC200AL***	***DDC200BR***
3"	105 mm	***DDC300SS105***	***DDC300AL105***	***DDC300GM105***
3"	119 mm	***DDC300SS***	***DDC300AL***	***DDC300GM***
4"	164 mm	***DDC400SS***	***DDC400AL***	***DDC400GM***
6"	238 mm	***DDC600SS***	***DDC600AL***	---

[1] produced to U.S. government bronze specification G

coupler x 150# ASA flange with FKM (FPM) seals

150# Flange	Body Size	*316 Stainless Steel*
2"	70 mm	***DDC200SSFL***
3"	119 mm	***DDC300SSFL***
4"	164 mm	***DDC400SSFL***
6"	238 mm	***DDC600SSFL***
8"	272 mm	***DDC800SSFL***

coupler x TTMA flange with FKM (FPM) seals

TTMA Flange	Body Size	*Aluminum*
4"	164 mm	***DDC400AL164TTMA***

Dust Plugs for Couplers

Feature:

- Composite (Polyeten PE-HD 300) plugs provide good protection against corrosion and withstands hot and cold environments.

dust plugs

Size	Body Size	*Polyeten PE-HD 300*
¾" and 1"	56 mm	***DDDP075***
1½" and 2"	70 mm	***DDDP150***
3"	105 mm	***DDDP300105***
3"	119 mm	***DDDP300***
4"	164 mm	***DDDP400***
6"	238 mm	***DDDP600*** [2]

[2] 6" dust plug is aluminum

Dry Quick Disconnects

Adapter - Tank Unit

Features:

- adapter is usually installed on the tank or manifold
- conical valve seat reduces the risk for "piston blow out"
- PTFE bearings between the piston shaft and the piston guide eliminate the risk for seizure
- for information on repair kits visit us on-line at dixonvalve.com
- aluminum adapter - aluminum poppet, stainless steel internal parts
- stainless steel adapter - stainless steel poppet, stainless steel internal parts
- brass / gunmetal * adapter - brass poppet, brass and stainless steel internal parts

[1] produced to U.S. government bronze specification G

adapter x female NPT with FKM (FPM) seals

Female NPT	Body Size	*316 Stainless Steel*	*Aluminum*	*Brass / Gunmetal* [1]
¾"	56 mm	***DDA075SS***	***DDA075AL***	***DDA075BR***
1"	56 mm	***DDA100SS***	***DDA100AL***	***DDA100BR***
1½"	70 mm	***DDA150SS***	***DDA150AL***	***DDA150BR***
2"	70 mm	***DDA200SS***	***DDA200AL***	***DDA200BR***
3"	105 mm	***DDA300SS105***	***DDA300AL105***	***DDA300GM105***
3"	119 mm	***DDA300SS***	***DDA300AL***	***DDA300GM***
4"	164 mm	***DDA400SS***	***DDA400AL***	***DDA400GM***
6"	238 mm	***DDA600SS***	***DDA600AL***	---

[1] produced to U.S. government bronze specification G

adapter x female NPT - DDA100BR

adapter x 150# ASA flange with FKM (FPM) seals

150# ASA	Body Size	*316 Stainless Steel*	*Aluminum*	*Brass / Gunmetal* [1]
¾"	56 mm	***DDA075SSFL***	---	---
1"	56 mm	***DDA100SSFL***	***DDA100ALFL***	***DDA100BRFL***
1½"	70 mm	***DDA150SSFL***	***DDA150ALFL***	***DDA150BRFL***
2"	70 mm	***DDA200SSFL***	***DDA200ALFL***	***DDA200BRFL***
3"	105 mm	***DDA300SS105FL***	***DDA300AL105FL***	***DDA300GM105FL***
3"	119 mm	***DDA300SSFL***	***DDA300ALFL***	***DDA300GMFL***
4"	164 mm	***DDA400SSFL***	***DDA400ALFL***	***DDA400GMFL***
6"	238 mm	***DDA600SSFL***	***DDA600ALFL***	---
8"	272 mm	***DDA800SSFL***	---	---

[1] produced to U.S. government bronze specification G

adapter x 150# ASA flange - DDA200SSFL

adapter x TTMA flange with FKM (FPM) seals

TTMA	Body Size	*Aluminum*
3"	105 mm	***DDA300AL105TTMA***
3"	119 mm	***DDA300AL119TTMA***
4"	164 mm	***DDA400AL164TTMA***

adapter x TTMA flange - DDA300AL119TTMA

Dust Caps for Adapters

Feature:

- Composite (Polyeten PE-HD 300) caps provide good protection against corrosion and withstands hot and cold environments.
- FKM (FPM) gaskets standard on polyeten caps

dust caps

Size	Body Size	*Polyeten PE-HD 300*	*Rubber*
¾" and 1"	56 mm	***DDDC075***	---
1½" and 2"	70 mm	***DDDC150***	***DGDC200***
3"	105 mm	***DDDC300105***	---
3"	119 mm	***DDDC300***	***DGDC300***
4"	164 mm	***DDDC400***	---
6"	238 mm	***DDDC600*** [2]	---

[2] 6" dust cap is aluminum

composite cap

rubber cap

Dry Aviation Couplings

Coupler - Hose Unit

Applications: Dry aviation couplings are designed for use in aviation refueling systems. Manufactured to accept the international standard 2½" point bayonet, hose end refueling nozzles according to: ISO45 / MS24484 / STANAG 3105 / British Aerospace Spec. 2C14. ***They are not configured for under-wing refueling.***

Features:

- body: high strength aluminum
- coupling ring: gunmetal
- bayonet flange and inner parts: stainless steel, aluminum
- all wetted parts are aluminum and stainless steel
- **150 PSI** working pressure
- stainless steel ball bearings
- gunmetal (produced to U.S. government bronze specification G) coupling ring minimizes the risk of seizure
- stainless steel shaft journal embedded in PTFE eliminates seizure
- PTFE bearings between the driving plate and the piston guide eliminate the risk of seizure
- riveted piston pin minimizes the risk of failure under extreme pressure conditions
- the protective ring is a specially formulated, weather resistant and electrically conductive rubber compound

female NPT x coupler - DAC250AL

coupler x female NPT with FKM (FPM) seals

Female NPT	Body Size	*Aluminum*
2½"	ISO 45	***DAC250AL***
3"	ISO 45	***DAC300AL***

coupler x female BSP with FKM (FPM) seals

Female BSP	Body Size	*Aluminum*
2½"	ISO 45	***DAC250ALBSP***
3"	ISO 45	***DAC300ALBSP***

Sight Flow Indicators

Features:

- filter / screen can be inspected through the sight glass
- filter / screen is easily removed if cleaning is required
- screen is 100 mesh

sight flow indicator - ASFI25T25B

aviation sight flow indicator with filter / screen

Female Thread	Male Thread	*Aluminum*
2½" NPT	2½" BSP	***ASFI25T25B***
3" NPT	3" BSP	***ASFI30T30B***
2½" NPT	2½" NPT	***ASFI25T25T***
3" NPT	3" NPT	***ASFI30T30T***

Dust Plug for Couplers

Feature:

- Composite (Polyeten PE-HD 300) plug provides good protection against corrosion and withstands hot and cold environments.

composite plug

composite dust plug

Size	Body Size	*Polyeten PE-HD 300*
2½"	ISO 45	***DADP250***

Dry Aviation Couplings

Adapter - Tank Unit

Applications: Dry aviation couplings are designed for use in aviation refueling systems. Manufactured to accept the international standard 2½" point bayonet, hose end refueling nozzles according to: ISO45 / MS24484 / STANAG 3105 / British Aerospace Spec. 2C14. ***They are not configured for under-wing refueling.***

Features:

- gunmetal coupling ring minimizes the risk of seizure
- PTFE bearings between the piston shaft and the piston guide eliminate the risk of seizure
- conical valve seat eliminates the risk of "piston blow out" when extreme pressure is used
- body: high strength aluminum
- bayonet flange and inner parts: stainless steel, aluminum
- all wetted parts are aluminum and stainless steel
- coupling ring: gunmetal
- **150 PSI** working pressure at ambient temperature (70°F)

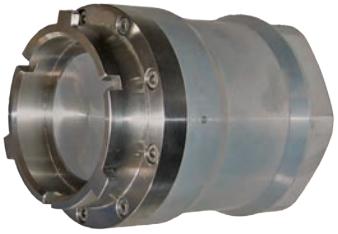

adapter x female NPT - DAA250AL

adapter x female NPT with FKM (FPM) seals

Female NPT	Body Size	*Aluminum*
2½"	ISO 45	***DAA250AL***
3"	ISO 45	***DAA300AL***

adapter x 150# ASA flange - DAA250ALFL

adapter x 150# ASA flange with FKM (FPM) seals

Female BSP	Body Size	*Aluminum*
2½"	ISO 45	***DAA250ALFL***
3"	ISO 45	***DAA300ALFL***

Dust Cap for Adapter

Feature:

- Composite (Polyeten PE-HD 300) cap provides good protection against corrosion and withstands hot and cold environments.

composite cap

composite dust caps for adapters

Size	Body Size	*Polyeten PE-HD 300*
2½"	ISO 45	***DADC250***

Dry Gas Couplings

Coupler - Hose Unit

Applications: Dry gas couplings are designed for safe loading and discharge of bulk delivery trucks and rail cars. They are quick and easy to connect and can be connected to a tank unit with pressures up to **225 PSI**. If the pressure is higher you can equip the couplings with a pressure relief valve. The easy to connect pressure relief valve dissipates trapped fluid pressure into the hose coupler without spillage. The primary application of dry gas couplings is in the handling of LPG - Propane and Butane.

Features:

- stainless steel and brass / gunmetal (produced to U.S. government bronze specification G)
- FKM (FPM) seals
- female NPT, female ACME and ASA flanges
- **360 PSI** working pressure at ambient temperature (70°F)
- safe handling of LPG
- reliable and easy to maintain
- can be coupled against higher pressure
- minimizes the risk of cold burns
- minimizes spillage and product loss
- minimizes health risks
- keeps the environment free of hazardous vapors and liquids

female NPT x coupler
DGC300SS

coupler x female NPT with FKM (FPM) seals

Female NPT	Body Size	*Stainless Steel*
1"	56 mm	***DGC100SS***
2"	71 mm	***DGC200SS***
3"	119 mm	***DGC300SS***

Dust Plugs for Couplers

Feature:

- Composite (Polyeten PE-HD 300) plugs provide good protection against corrosion and withstand hot and cold environments

composite plug

composite dust plug

Size	Body Size	*Polyeten PE-HD 300*
1"	56 mm	***DGDP100***
2"	71 mm	***DGDP200***
3"	119 mm	***DGDP300***

Dry Gas Couplings

Adapter - Tank Unit

Applications: Dry gas couplings are designed for safe loading and discharge of bulk delivery trucks and rail cars. They are quick and easy to connect and can be connected to a hose unit with pressures up to **225 PSI.** If the pressure is higher you can equip the couplings with a pressure relief valve. The easy to connect pressure relief valve dissipates trapped fluid pressure into the hose coupler without spillage. The primary application of dry gas couplings is in the handling of LPG - Propane and Butane.

Features:

- safe handling of LPG
- reliable and easy to maintain
- can be coupled to a hose unit with pressures up to **225 PSI**
- minimizes the risk of cold burns
- minimizes spillage and product loss
- minimizes health risks
- keeps the environment free of hazardous vapors and liquids
- stainless steel and brass / gunmetal (produced to U.S. government bronze specification G)
- FKM (FPM) seals
- female NPT, female ACME thread and ASA flanges
- **360 PSI** working pressure

adapter x female NPT - DGA200SS

adapter x female NPT with FKM (FPM) seals

Female NPT	Body Size	*Stainless Steel*
1"	56 mm	***DGA100SS***
2"	71 mm	***DGA200SS***
3"	119 mm	***DGA300SS***

adapter x female ACME - DGA200SS325

adapter x female ACME thread with FKM (FPM) seals

Female ACME	Body Size	*Stainless Steel*
1¾"	56 mm	***DGA100SS175***
3¼"	71 mm	***DGA200SS325***

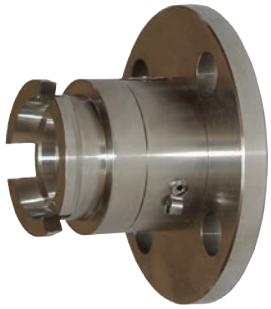

adapter x 150# ASA flange - DGA200SSFL

adapter x 150# ASA flange with FKM (FPM) seals

150# ASA	Body Size	*Stainless Steel*
1"	56 mm	***DGA100SSFL***
2"	71 mm	***DGA200SSFL***
3"	119 mm	***DGA300SSFL***

Dust Caps

dust caps

Size	Body Size	*Polyeten PE-HD 300*	*Rubber*
1"	56 mm	***DGDC100***	---
2"	71 mm	---	***DGDC200***
3"	119 mm	---	***DGDC300***

rubber cap

Dry Disconnect Fittings for Steam Service

Applications:
Designed to fit hoses carrying steam used in chemical (heating), pharmaceutical (disinfection and sterilization) and at loading bays

Features:
- coupling housing and all inner parts: stainless steel
- seals: EPDM 291, other materials available, contact Dixon
- unintentional separation is eliminated preventing accidents and avoiding unintended down time
- performance unaffected by surface rust
- lockable versions are available on 1½" and 2", contact Dixon
- couplers supplied with double handles

female NPT x adapter

adapter x female NPT

Female NPT	Body Size	*Stainless Steel*
3/4"	56mm	***DDSA075SS***
1"	56mm	***DDSA100SS***
1½"	70mm	***DDSA150SS***
2"	70mm	***DDSA200SS***

female NPT x coupler

coupler x female NPT

Female NPT	Body Size	*Stainless Steel*
3/4"	56mm	***DDSC075SS***
1"	56mm	***DDSC100SS***
1½"	70mm	***DDSC150SS***
2"	70mm	***DDSC200SS***

Dry Disconnect Couplings

Flow Rate
Media: Water ***Temp:*** 60° F

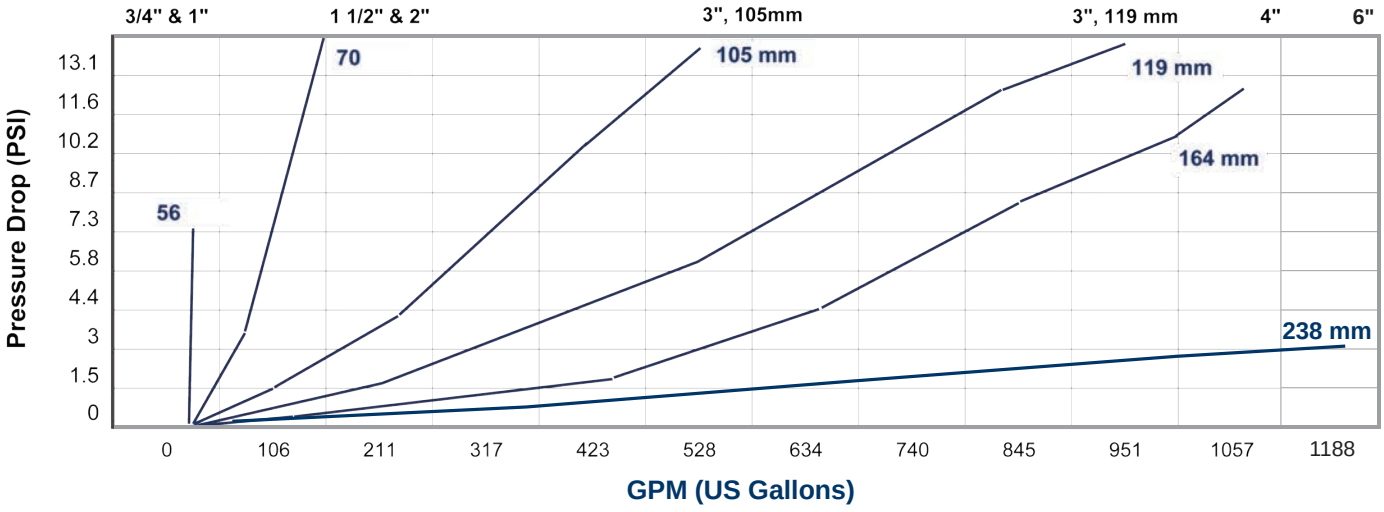

Spillage on Disconnection

The test was made by coupling and uncoupling 10 times under pressures between one (1) and ten (10) bars. The result we got is a total spillage over 10 coupling cycles and an average spillage on each coupling cycle. The test was carried out with water under ambient temperature.

Size	Socket diameter	Total spill 10 cycles	Average spill 1 cycle
1" – DN 25	56 mm	1 ml	0.1 ml
2" – DN 50	70 mm	3 ml	0.3 ml
2½" – DN 65	105 mm	8 ml	0.8 ml
3" – DN 80	119 mm	10 ml	1.0 ml
4" – DN 100	164 mm	35 ml	3.5 ml

Options for Hose and Tank Units

Electronic Sensors

Electronic Sensors detect the position of the driving plate inside of the hose unit.

No modification on the tank is required. This makes it possible to identify if the hose unit is connected to a tank unit and if they are in an open position.

Dry Disconnect Couplings

Options for Hose and Tank Units

Locking Devices

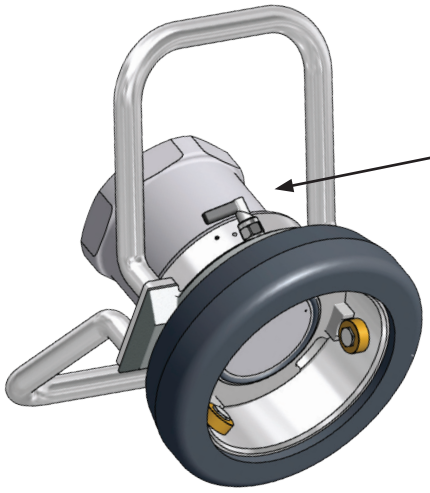

4" Hose unit with locking device

Locking Devices eliminate the unintentional disconnection when subjected to vibration from transfer pumps

2" Hose unit with locking device

Selectivity Options

Selectivity versions of Hose and Tank units are available to prevent the accidental mixing of media.

The Tank units are furnished with slots and the Hose unit with pins that interlock upon connection.

A number of selectivity options are possible depending on coupling size.

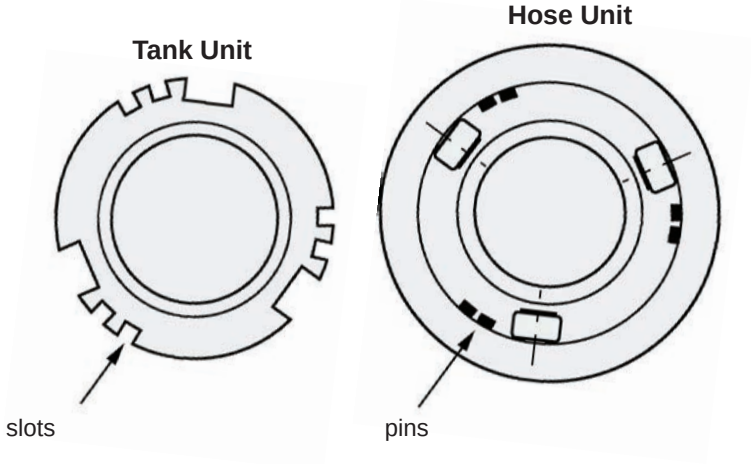

Handle Options

Optional handles are available for 1"- 4" Hose couplers. *2" Hose unit shown.*

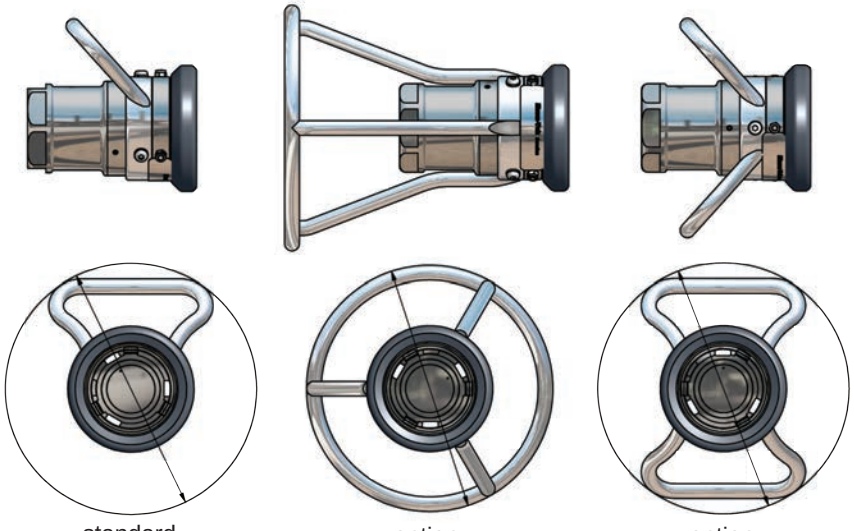

Bayloc™ Dry Disconnect Couplings

Couplers

Features:

- dry disconnect coupler has automatic closing poppet assembly
- heavy duty stainless steel crank and link provide long service life
- stainless steel handle allows product exposure to corrosive chemicals or washdown service
- strong handle attachment prevents bending of crank assembly
- fully interchangeable with Kamvalok (OPW trademark) style fittings
- aluminum fittings have stainless steel[1] internals
- for pressure ratings at other temperatures, contact the factory
- Dixon EZ Boss-Lock cam arms standard on all fittings, provide high security from accidental opening due to vibration or snagging
- large paddle type cam arms standard on 3" fittings, allow for an easy grip
- for information on repair kits visit us on-line at dixonvalve.com

Must be used with a DBA style adapter for coupler to operate.
Adapter sold separately.
(*see next page*)

[1] stainless steel corrosion resistance is comparable to 304 stainless steel

[2] FFPM gasket, main seal O-ring and handle O-ring. PTFE seals on cylinder assembly, stuffing box, and seal under poppet screw.

coupler x female NPT

Female NPT	Coupler Size	Seal Material	*Aluminum*		*Stainless Steel* [1]	
			Dixon #	OPW #	Dixon #	OPW #
1½"	2"	Buna	***DBC61-150***	1711D-AL15/1761	***DBC71-150***	1771D-SS15
2"	2½"		***DBC61-200***	1711D-AL20/1761	***DBC71-200***	1771D-SS20
3"	4"		***DBC61-300***	1711D-AL30	***DBC71-300***	1771D-SS30
1½"	2"	FKM	***DBC62-150***	1712D-AL15/1762	***DBC72-150***	1772D-SS15
2"	2½"		***DBC62-200***	1712D-AL20/1762	***DBC72-200***	1772D-SS20
3"	4"		***DBC62-300***	1712D-AL30	***DBC72-300***	1772D-SS30
1½"	2"	PTFE Encap. Silicone and FFPM	***DBC63-150***	1763D-AL15	***DBC73-150***	1773D-SS15
2"	2½"		***DBC63-200***	1763D-AL20	***DBC73-200***	1773D-SS20
3"	4"		***DBC63-300***	1763D-AL30	***DBC73-300***	1773D-SS30
1½"	2"	EPT	***DBC64-150***	1764D-AL15	***DBC74-150***	1774D-SS15
2"	2½"		***DBC64-200***	1764D-AL20	***DBC74-200***	1774D-SS20
3"	4"		***DBC64-300***	1764D-AL30	***DBC74-300***	1774D-SS30
1½"	2"	FFPM and PTFE	---	---	***DBC76-150***	1776D-SS15
2"	2½"		***DBC66-200***	1766D-AL20	***DBC76-200***	1776D-SS20
3"	4"		---	---	***DBC76-300***	1776D-SS30
1½"	2"	PTFE Encap. FKM and FFPM	---	---	***DBC77-150***	1777D-SS15
2"	2½"		---	---	***DBC77-200***	1777D-SS20
3"	4"		---	---	***DBC77-300***	1777D-SS30
3"	4"	FKM B	***DBC69-300***	1769D-AL30	***DBC79-300***	1779D-SS30

coupler x female NPT - DBC71-200

coupler x female NPT - DBC61-300

greaseless coupler x female NPT

Female NPT	Coupler Size	Seal Material	*Aluminum*	*Stainless Steel*
1½"	2"	PTFE Encap. FKM and FFPM	***DBC67-150-GL***	***DBC77-150-GL***
2"	2½"		***DBC67-200-GL***	***DBC77-200-GL***

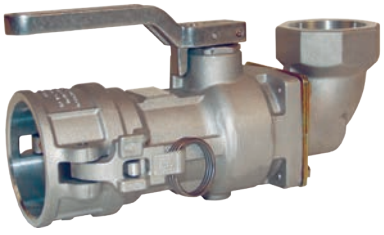

coupler x 90° swivel female NPT - DSB61-200

coupler x 90° swivel female NPT

Female NPT	Coupler Size	Seal Material	*Aluminum*	
			Dixon #	OPW #
2"	2½"	Buna	***DBS61-200***	1711ES-0200
2"	2½"	FKM	***DBS62-200***	1712ES-0200
2"	2½"	PTFE Encap. Silicone and FFPM	***DBS63-200***	---

locking kit - DBCL-200

dust plug - G200-DP-AL

Locking Kit for Couplers

Features:

- prevents unintentional opening of poppet assembly

Description	*Aluminum*
for use with 1½" and 2" cam and groove couplers	***DBCL-200***
for use with 3" cam and groove couplers	***DBCL-300***

Dust Plugs for Couplers

Size	*Aluminum*	*Stainless Steel*
2"	***G200-DP-AL***	***G200-DP-SS***
2½	***G250-DP-AL***	***G250-DP-SS***
4"	***G400-DP-AL***	***G400-DP-SS***

Bayloc™ Dry Disconnect Couplings

Adapters

Applications: Compatible with most cam and groove style dry disconnects, the Bayco dry disconnect helps prevent spillage from normal or accidental disconnects. A spring loaded sealing device is designed to "snap" closed should the valve become disconnected with the poppet open, significantly limiting liquid loss.

adapter x female NPT - DBA71-200

adapter x female NPT - DBA11-300

adapter x flange - DBAF71-200

vapor adapter x female NPSM - DBAV73-2030

dust cap G200-DC-AL

Features:

- two-piece design for easy rebuilding of adapters
- fully interchangeable with Kamvalok (OPW trademark) style fittings
- aluminum fittings have aluminum nose piece and brass piston
- for pressure ratings at other temperatures, contact the factory
- for information on repair kits visit us on-line at dixonvalve.com

adapter x female NPT

Female NPT	Adapter Size	Seal Material	*Aluminum*		*Stainless Steel* [1]	
			Dixon #	OPW #	Dixon #	OPW #
1½"	2"	Buna	***DBA11-150***	1611AN-AL15	***DBA71-150***	1671AN-SS15
2"	2½"		***DBA11-200***	1611AN-AL20	***DBA71-200***	1671AN-SS20
3"	4"		***DBA11-300***	1611AN-AL30	***DBA71-300***	1671AN-SS30
1½"	2"	FKM	***DBA12-150***	1612AN-AL15	***DBA72-150***	1672AN-SS15
2"	2½"		***DBA12-200***	1612AN-AL20	***DBA72-200***	1672AN-SS20
3"	4"		***DBA12-300***	1612AN-AL30	***DBA72-300***	1672AN-SS30
1½"	2"	PTFE Encap. Silicone	***DBA63-150***	1613AN-AL15	***DBA73-150***	1673AN-SS15
2"	2½"		***DBA63-200***	1613AN-AL20	***DBA73-200***	1673AN-SS20
3"	4"		***DBA63-300***	1613AN-AL30	***DBA73-300***	1673AN-SS30
1½"	2"	EPT	***DBA64-150***	1614AN-AL15	***DBA74-150***	1674AN-SS15
2"	2½"		***DBA64-200***	1614AN-AL20	***DBA74-200***	1674AN-SS20
3"	4"		***DBA64-300***	1614AN-AL30	***DBA74-300***	1674AN-SS30
1½"	2"	FFPM	***DBA66-150***	1616AN-AL15	***DBA76-150***	1676AN-SS15
2"	2½"		***DBA66-200***	1616AN-AL20	***DBA76-200***	1676AN-SS20
3"	4"		***DBA66-300***	1616AN-AL30	***DBA76-300***	1676AN-SS30
1½"	2"	PTFE Encap. FKM	---	---	***DBA77-150***	1677AN-SS15
2"	2½"		---	---	***DBA77-200***	1677AN-SS20
3"	4"		---	---	***DBA77-300***	1677AN-SS30
3"	4"	FKM B	***DBA69-300***	1619AN-AL30	---	---

jump size adapter x female NPT

Female NPT	Adapter Size	Seal Material	*Aluminum*	
			Dixon #	OPW #
2"	2"	Buna	***DBA11-1520***	---
2"	2"	FKM	***DBA12-1520***	---

adapter x 150# ASA flange

Flange Size	Adapter Size	Seal Material	*Stainless Steel* [1]	
			Dixon #	OPW #
2"	2"	FKM	***DBAF72-1520***	1672ANF-SS15
2"	2½"		***DBAF72-200***	1672ANF-SS20
3"	4"		***DBAF72-300***	1672ANF-SS30
2"	2"	PTFE Encap. Silicone	***DBAF73-1520***	1673ANF-SS15
2"	2½"		***DBAF73-200***	1673ANF-SS20
3"	4"		***DBAF73-300***	1673ANF-SS30
2"	2"	EPT	***DBAF74-1520***	1674ANF-SS15
2"	2½"		***DBAF74-200***	1674ANF-SS20
3"	4"		***DBAF74-300***	1674ANF-SS30
2"	2"	FFPM	***DBAF76-1520***	1676ANF-SS15
2"	2½"		***DBAF76-200***	1676ANF-SS20
3"	4"		***DBAF76-300***	1676ANF-SS30

vapor adapter x female NPSM

Female NPSM	Adapter Size	Seal Material	*Stainless Steel* [1]	
			Dixon #	OPW #
3"	2"	PTFE	***DBAV73-2030***	2173AVN

[1] stainless steel corrosion resistance is comparable to 304 stainless steel

Dust Caps for Adapters

Size	*Aluminum*	*Stainless Steel*
2"	***G200-DC-AL***	***G200-DC-SS***
2½"	***G250-DC-AL***	***G250-DC-SS***
4"	***G400-DC-AL***	***G400-DC-SS***

Bayloc™ Dry Disconnect Couplings

Flow Chart

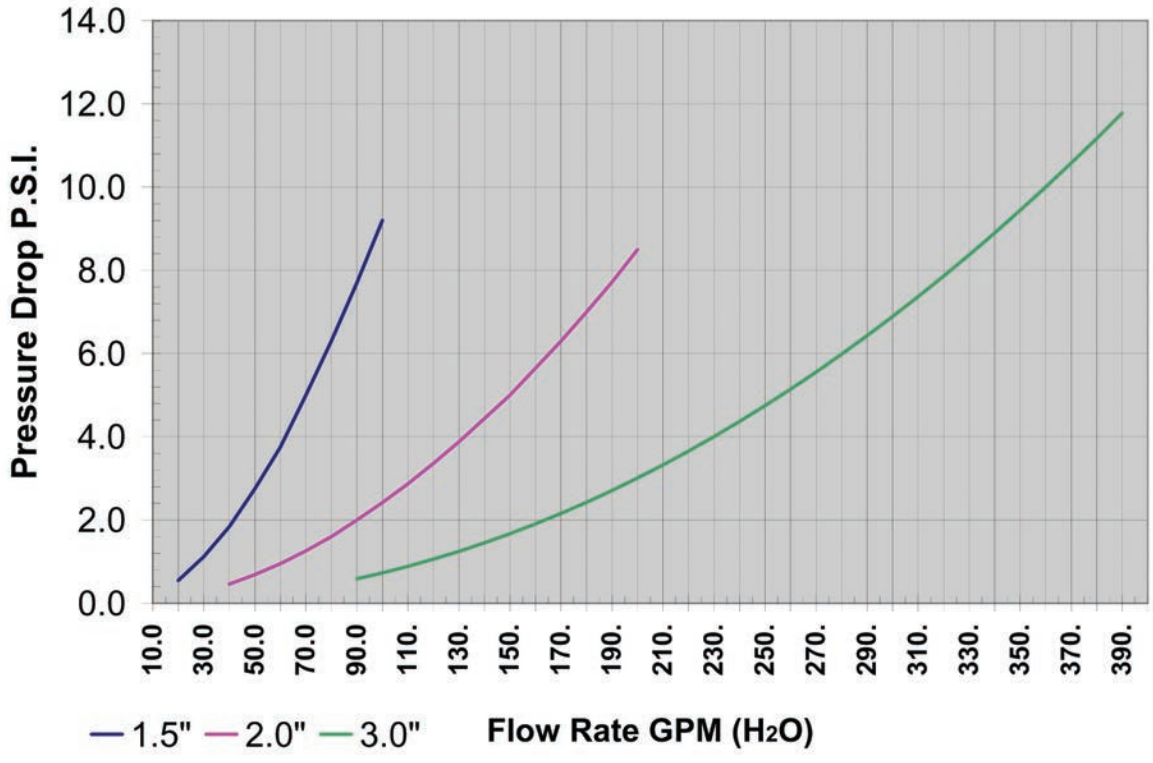

Pressure / Temperature Chart

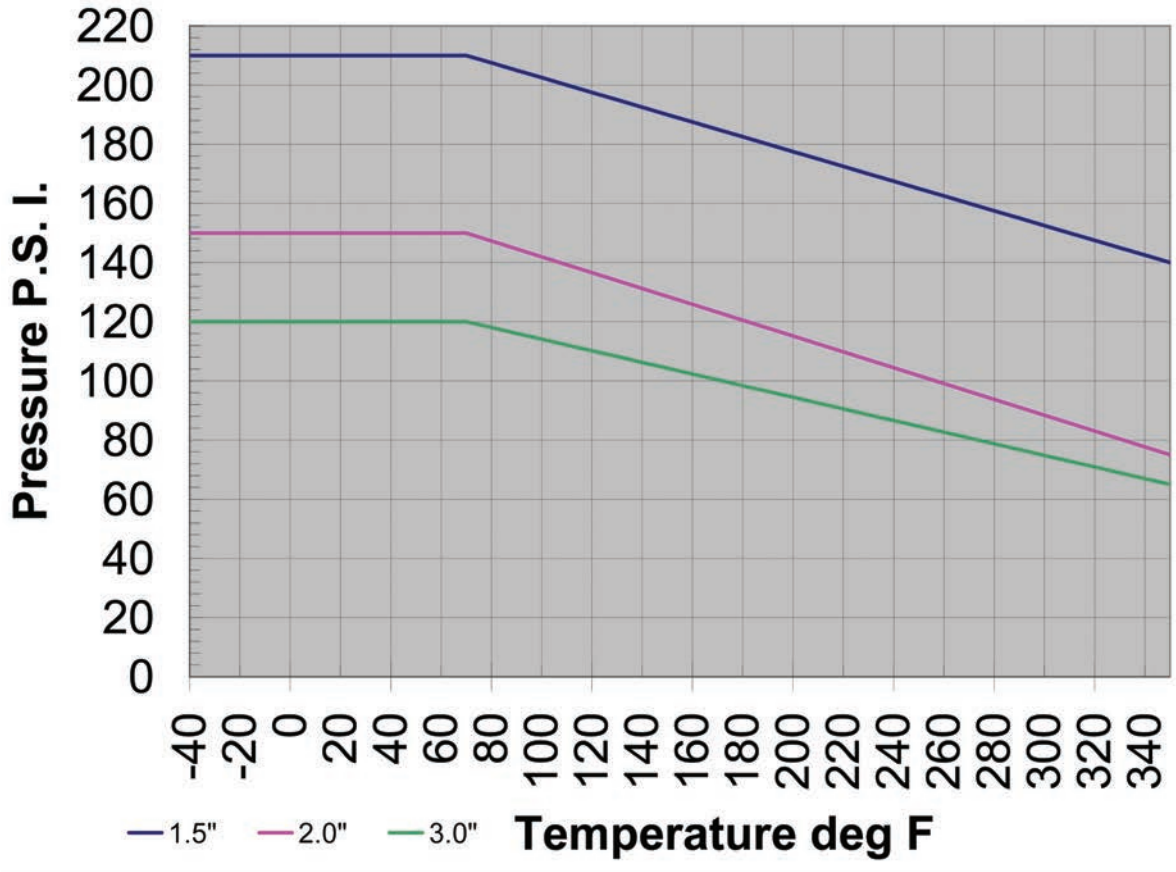

Bayonet Style Dry Disconnect Couplings

Couplers

coupler x straight female NPT - BC62-200

Applications: Bayco brand BA and BS series bayonet dry disconnect fittings are designed for use in the fuel and lube oil service industry.

Features:

- These fittings are compatible with Emco Wheaton™ Dry Break™, commonly found in these services.
- The maximum pressure rating for fittings is **85 PSI** at 70°F, for pressure ratings at other temperatures contact Dixon.
- for information on repair kits visit us on-line at dixonvalve.com

coupler x straight female NPT

Size	Seal Material	*Anodized Aluminum*	
		Dixon #	Emco Wheaton™ #
2"	Buna	***BC61-200***	J72C-ABN0-B
2"	FKM	***BC62-200***	J72C-AVN0-B

coupler x straight swivel female NPT - BSS62-300

coupler x straight swivel female NPT

Size	Seal Material	*Anodized Aluminum*	
		Dixon #	Emco Wheaton™ #
2"	Buna	***BSS61-200***	J72C-ABN1-B
2"	FKM	***BSS62-200***	J72C-AVN1-B
3"	Buna	***BSS61-300***	J73C-ABN1-B
3"	FKM	***BSS62-300***	J73C-AVN1-B

coupler x 90° swivel female NPT - BS62-200

coupler x 90° swivel female NPT

Size	Seal Material	*Anodized Aluminum*	
		Dixon #	Emco Wheaton™ #
2"	Buna	***BS61-200***	J72C-ABN2-B
2"	FKM	***BS62-200***	J72C-AVN2-B
3"	Buna	***BS61-300***	J73C-ABN2-B
3"	FKM	***BS62-300***	J73C-AVN2-B

coupler x 90° swivel female NPT - BS62-300

Dust Plugs for Couplers

dust plug BCP-200

Size	Part #
2"	***BCP-200***
3"	***BCP-300***

- Rubber dust plugs come with stainless steel chains.

Bayonet Style Dry Disconnect Couplings

Adapters

Applications: Bayco brand BA and BS series bayonet dry disconnect fittings are designed for use in the fuel and lube oil service industry.

Features:

- These fittings are compatible with Emco Wheaton™ Dry Break™, commonly found in these services.
- The maximum pressure rating for fittings is **85 PSI** at 70°F, for pressure ratings at other temperatures contact Dixon.
- for information on repair kits visit us on-line at dixonvalve.com

adapter x female NPT

Size	Seal Material	*Stainless Steel*	
		Dixon #	Emco Wheaton™ #
2"	Buna	***BA31-200***	J72A-BBN0-B / J72A-ABN0-B
2"	FKM	***BA32-200***	J72A-BVN0-B / J72A-AVN0-B

adapter x female NPT - BA32-200

adapter x female NPT

Size	Seal Material	*Brass*	
		Dixon #	Emco Wheaton™ #
3"	Buna	***BA31-300***	J73A-BBN0-B
3"	FKM	***BA32-300***	J73A-BVN0-B

adapter x female NPT - BA31-300

adapter x female NPT

Size	Seal Material	*Aluminum*	
		Dixon #	Emco Wheaton™ #
3"	Buna	***BA61-300***	J73A-ABN0-B
3"	FKM	***BA62-300***	J73A-AVN0-B

adapter x female NPT - BA62-300

Dust Caps for Adapters

Size	*Polyeten PE-HD 300*
2"	***DDDC150***
3"	***DDDC300105***

composite dust cap DDDC300105

Size	*Rubber*
2"	***BAC-200***
3"	***BAC-300***

rubber dust cap BAC-300

- Rubber dust plugs come with stainless steel chains.

Industrial Safety Break-Away Couplings - Breaking Bolt Series

Advantages

Industrial break-away coupling can be utilized for most industrial product transfer installations.

The industrial SBCouplings are specifically designed to be able to activate with a tensile force being applied at an angle to the plane of the coupling housing, up to 90 degrees.

Key Features

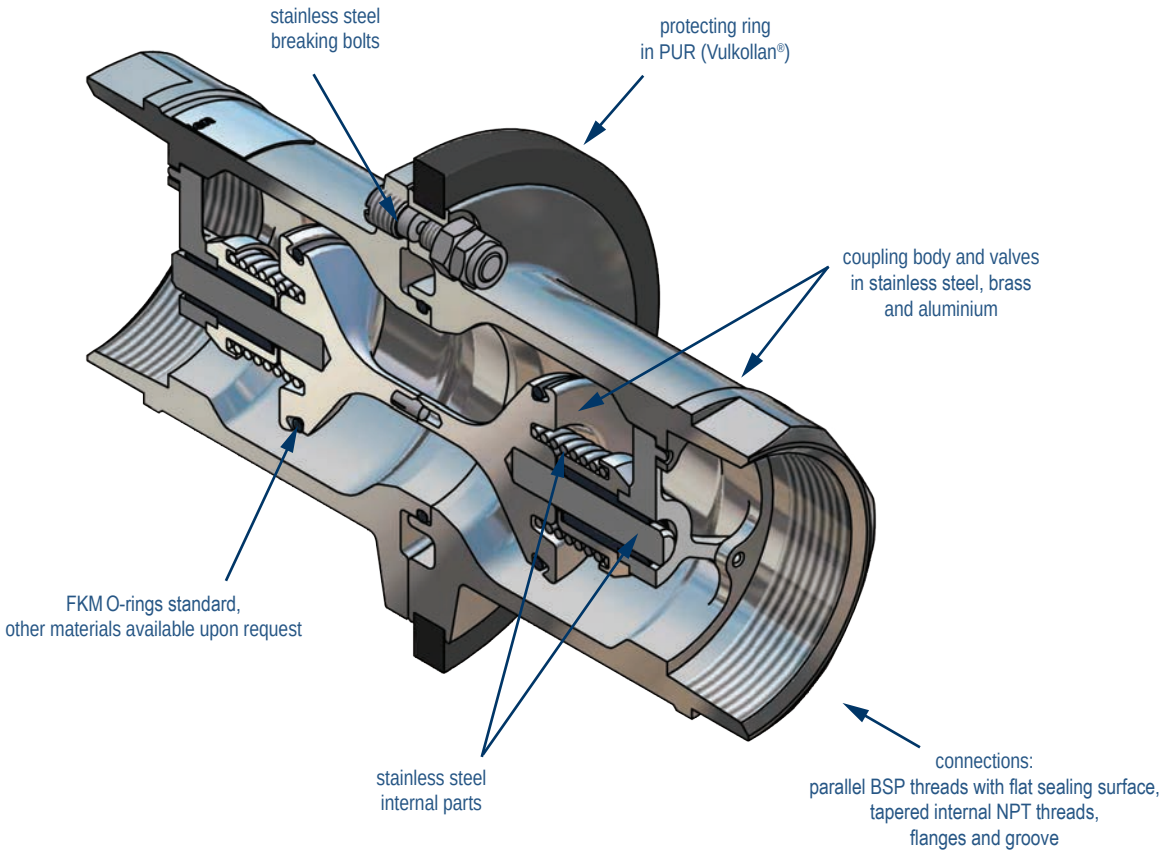

Safety Break-Away Couplings

Industrial Version

The breaking bolt industrial breakaway coupling is designed to minimize spillage and damage associated with drive away and pull away incidents.

Features:

- **designed to be installed between a fixed point (pipe, pump, manifold) and a hose**
- coupling automatically senses an excessive load, closes the valves and disconnects (*see page 24*)
- simple dependable mechanism
- high flow rate / low pressure drop
- female NPT is standard, optional ASA/ DIN flanges or male NPT are available
- FKM is standard seal
- Working pressure: stainless steel **360 PSI** and aluminum **230 PSI** at ambient temperature (70°F)
- for information on repair kits visit us on-line at dixonvalve.com

SBC200AL - aluminum

industrial breaking bolt series

Size	DN	Flow Rate GPM	Width	Length	Weight lbs.		*316 Stainless Steel*	*Aluminum*
					SS	*AL*		
2"	50	**200**	4.5"	7"	6.8	2.4	***SBC200SS***	***SBC200AL***
3"	80	**650**	6.8"	11"	19.6	7.3	***SBC300SS***	***SBC300AL***
4"	100	**800**	8.3"	12"	35.9	12.8	***SBC400SS***	***SBC400AL***
5"	125	**1100**	10.6"	14"	69.4	26.6	***SBC500SS***	***SBC500AL***
6"	150	**1500**	12"	16"	103.0	37.6	***SBC600SS***	***SBC600AL***
2"	50	**200**	4.5"	7"	6.2	2.2	***SBC200SSMNPT*** [1]	***SBC200ALMNPT*** [1]
3"	80	**650**	6.8"	11.3"	18.7	7.0	***SBC300SSMNPT*** [1]	***SBC300ALMNPT*** [1]
4"	100	**800**	8.3"	12.9"	36.8	13.0	***SBC400SSMNPT*** [1]	***SBC400ALMNPT*** [1]
5"	125	**1100**	10.6"	13.8"	66.1	26.6	***SBC500SSMNPT*** [1]	***SBC500ALMNPT*** [1]
6"	150	**1500**	12"	16"	103.0	37.6	***SBC600SSMNPT*** [1]	***SBC600ALMNPT*** [1]
2"	50	**200**	4.5"	7"	7.5	5.7	***SBC200SSFL*** [2]	***SBC200ALFL*** [2]
3"	80	**650**	6.8"	8.5"	25.4	12.1	***SBC300SSFL*** [2]	***SBC300ALFL*** [2]
4"	100	**800**	9.3"	9"	43.2	17.2	***SBC400SSFL*** [2]	***SBC400ALFL*** [2]
5"	125	**1100**	10.6"	14"	70.4	26.6	***SSBC500SSFL*** [2]	***SSBC500ALFL*** [2]
6"	150	**1500**	12.5	15.1	110.0	40.0	***SBC600SSFL*** [2]	***SBC600ALFL*** [2]
8"	200	**3700**	13.5"	17.7"	157.0	--	***SBC800SSFL*** [2]	***SBC800ALFL*** [2]

[1] male NPT
[2] 150# flange

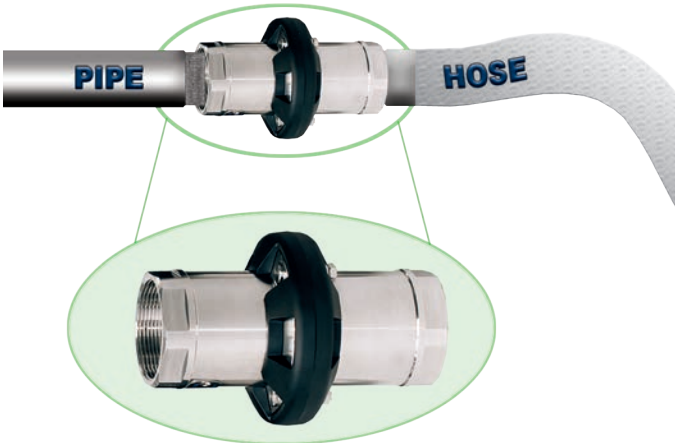

Industrial break-aways are typically installed on a loading arm or manifold and hose assemblies, where at least one side of the coupling is attached to a rigid or fixed point.

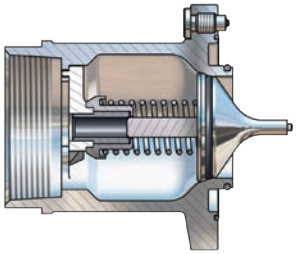

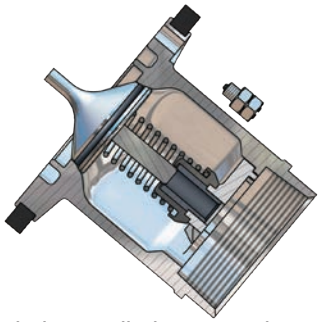

Release with a tensile force being applied at an angle to the plane of the coupling housing, up to 90 degrees.

Marine Safety Break-Away Couplings - Breaking Bolt Series

Advantages

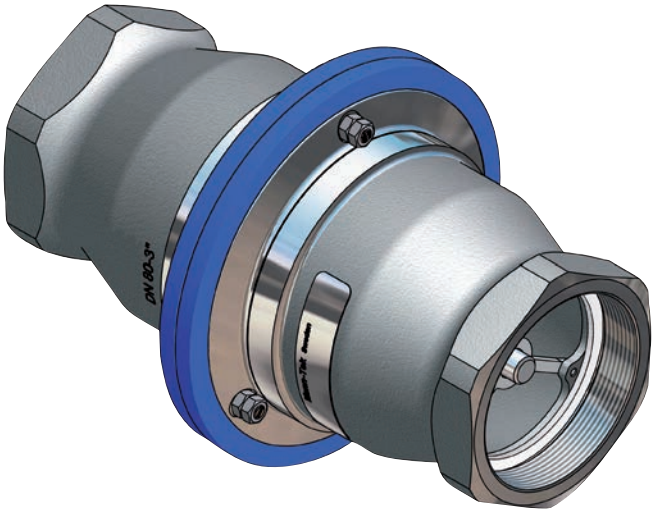

Marine version of the safety break-away couplings are designed specifically to be installed within a hose string, where the coupling would have a length of hose attached to both sides.

This coupling incorporates the same internal mechanism as our Industrial couplings, but has additional external features that provide increased resistance to torsional and bending moment forces which may be applied to the coupling, preventing premature activation in the unpredictable marine environment.

Key Features

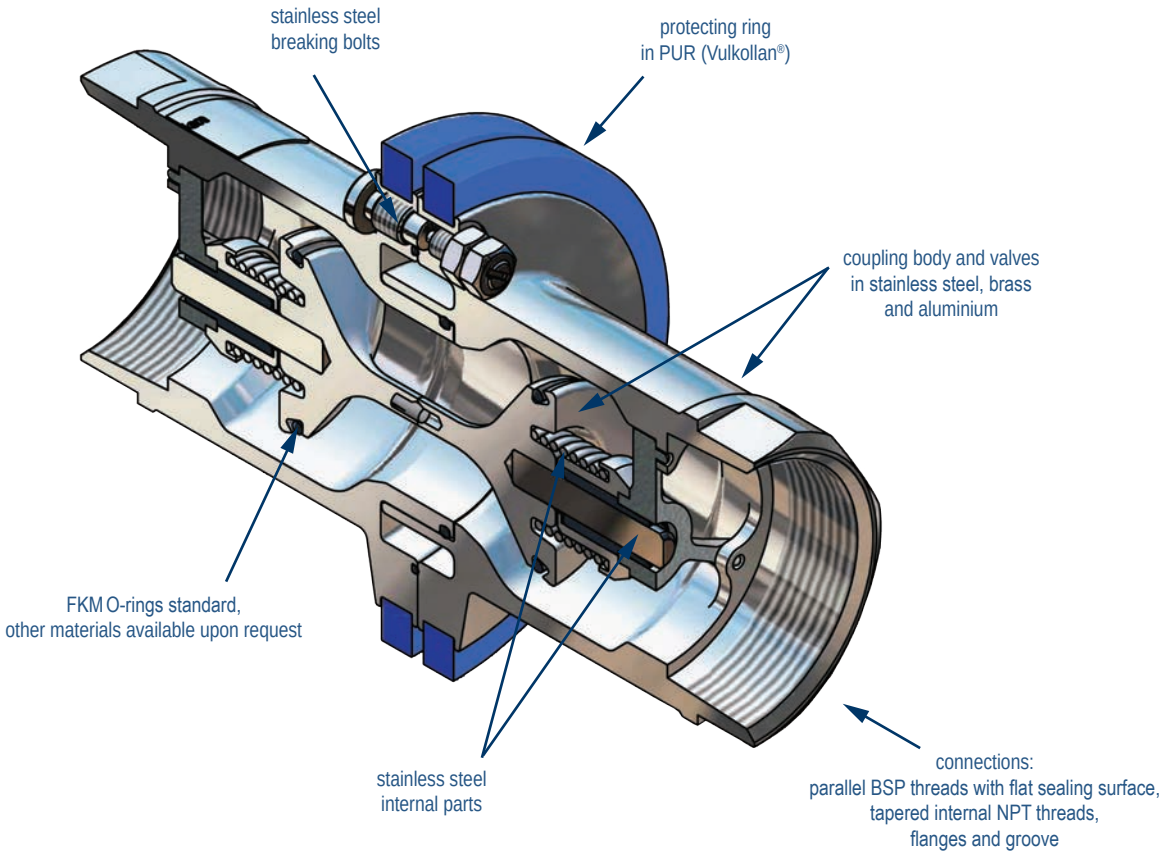

Safety Break-Away Couplings

Marine Version

The breaking bolt marine version break-away coupling is designed to minimize spillage and damage associated with pull-away incidents.

Features:

- **designed to be installed within a hose string where the coupling will have a length of hose attached to both sides**
- typical applications include: ship-to-offshore platform and ship-to-ship product transfer operations
- coupling automatically senses an excessive load, closes the valves and disconnects (*see page 23*)
- release is executed when force causes bolts to break
- female NPT is standard, optional ASA / DIN flanges or male NPT are available
- FKM is standard seal
- working pressure of stainless steel is **360 PSI** at ambient temperature (70°F)
- for information on repair kits visit us on-line at dixonvalve.com

MSBC300SS - stainless steel

marine breaking bolt series

Size	DN	Flow Rate GPM	Width	Length	Weight lbs.	*316 Stainless Steel*
2"	50	**200**	4.5"	7.0"	5.7	***MSBC200SS***
3"	80	**650**	6.8"	11.0"	21.8	***MSBC300SS***
4"	100	**800**	8.3"	12.0"	34.1	***MSBC400SS***
5"	125	**1100**	10.6"	14.0"	70.4	***MSBC500SS***
6"	150	**1500**	12.0"	16.0"	103.0	***MSBC600SS***
2"	50	**200**	n/a	n/a	5.7	***MSBC200SSMNPT*** [1]
3"	80	**650**	6.9"	11.8"	18.7	***MSBC300SSMNPT*** [1]
4"	100	**800**	8.3"	13.6"	36.8	***MSBC400SSMNPT*** [1]
5"	125	**1100**	n/a	n/a	70.4	***MSBC500SSMNPT*** [1]
2"	50	**200**	5.9"	5.4"	12.1	***MSBC200SSFL*** [2]
3"	80	**650**	7.5"	9.0"	27.3	***MSBC300SSFL*** [2]
4"	100	**800**	9.0"	9.9"	46.7	***MSBC400SSFL*** [2]
5"	125	**1100**	n/a	n/a	n/a	***MSBC500SSFL*** [2]
6"	150	**1500**	12.5	15.1	110	***MSBC600SSFL*** [2]
8"	200	**3700**	13.5"	17.7"	157	***MSBC800SSFL*** [2]

[1] male NPT
[2] 150# flange

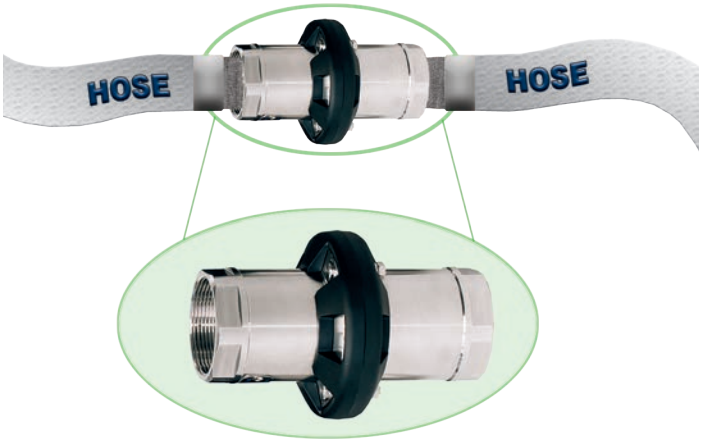

Marine safety break-aways are designed to only release by inline pull and used between two strings of hose.

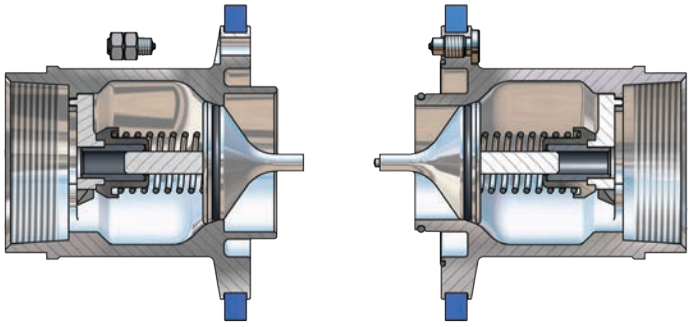

Safety Break-Away Couplings - Breaking Bolt Series

Examples of Connection Combinations

Features:

- BSP female thread / BSP female thread
- male thread / male thread
- groove / groove
- flange / flange
- NPT female thread / NPT female thread
- NPT female thread / NPT male thread (also available with BSP)
- NPT female thread / groove
- flange / thread (BSP / NPT female/male or groove)

BSP female thread x BSP female thread

NPT female thread / NPT female thread

male thread / male thread

NPT female thread / NPT male thread (also available with BSP)

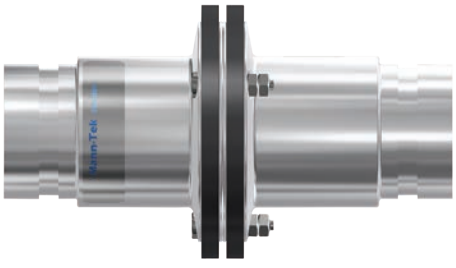

groove / groove

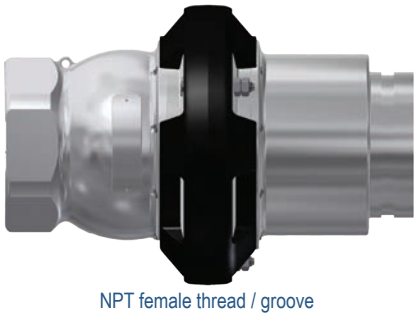

NPT female thread / groove

flange / flange

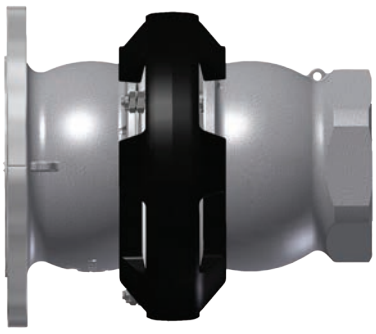

flange / thread (BSP / NPT female / male or groove)

Safety Break-Away Coupling - Options

Where there is a risk of excessive force on the hose due to unexpected movement between the loading and unloading station, combining the dry disconnect coupling or swivel with a safety break away coupling may be a solution.

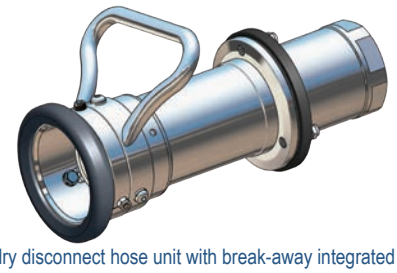

dry disconnect hose unit with break-away integrated

hose swivel with break-away integrated

Non-Closure Design

The non-closure design is an economical alternative which allows the coupling to break away due to pull-away/drive-away incidents thus protecting piping systems and equipment. This design allows spillage of product in these instances due to the lack of valving in the coupling.

Useful in applications where non-hazardous product is being conveyed and where there are no environmental concerns. Available in both Industrial and Marine versions. Consult Dixon for more information.

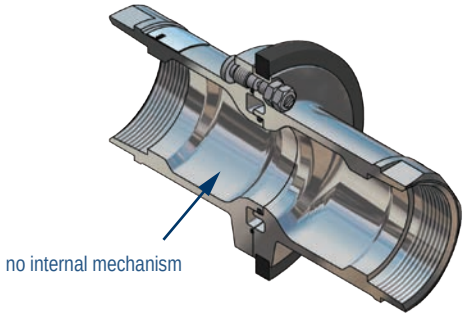

Safety Break-Away Couplings - Breaking Bolt Series

How It Works

The SBCouplings, safety break-away couplings, have three external break bolts. In the case of axial tension all of the bolts take up the force corresponding to the break force on the hose with a safety margin.

Non-axial forces concentrate the tension forces more strongly on one bolt, so that the safety break-away coupling reacts in a natural way to the reduction of the hose break forces.

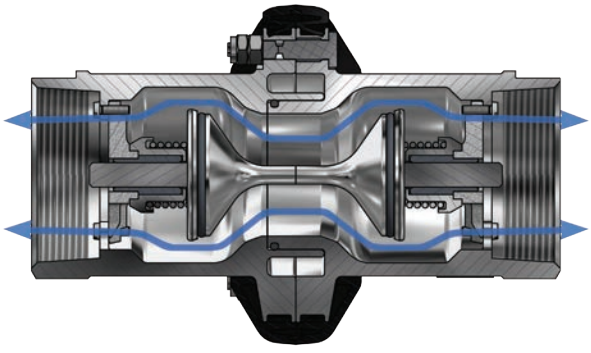

BEFORE emergency disconnect

The safety break-away valve consists of two halves, each with a valve that has a o-ring seal.

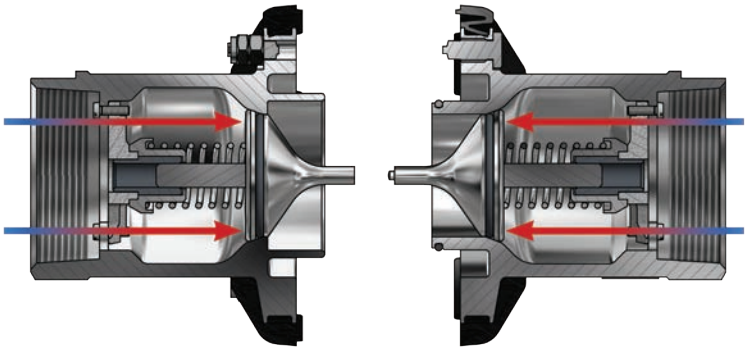

AFTER emergency disconnect

When the SBCouplings separate, it allows the valves to close. The two valves close rapidly, minimizing exposure to personnel and the environment.

Safety Break-Away Couplings - Breaking Bolt Series

Break loads for bolts should be based upon information specific to the application such as weight of unsupported hose or pipe and angle of pull associated with the specific application. Contact Dixon regarding specific applications.

ratings and kits for the standard aluminum industrial breaking bolt series

Size	Used On	kN rating	Pounds Force	Kits	
	Aluminum			*Standard Bolt*	*FKM O-ring*
2"	*SBC200AL*	9 kN	2,000	***S-N2D-44-9***	***O-ND2-01***
3"	*SBC300AL*	15 kN	3,000	***S-N4D-44-15***	***O-ND4-01***
4"	*SBC400AL*	24 kN	5,400	***S-N5D-44-24***	***O-ND5-01***
5"	*SBC500AL*	37 kN	8,300	***S-NVD-44-37***	***O-NVD-01***
6"	*SBC600AL*	54 kN	12,000	***S-N6D-44-54***	***O-N6D-01***
6"	*SBC600ALFL*	54 kN	12,000	***S-N6D-44-54***	***O-N6D-01***

ratings and kits for the standard stainless steel industrial breaking bolt series

Size	Used On	kN rating	Pounds Force	Kits	
	Stainless Steel			*Standard Bolt*	*FKM O-ring*
2"	*SBC200SS*	13 kN	2900	***S-N2D-44***	***O-ND2-01***
3"	*SBC300SS*	33 kN	7500	***S-N4D-44***	***O-ND4-01***
4"	*SBC400SS*	52 kN	11,700	***S-N5D-44***	***O-ND5-01***
5"	*SBC500SS*	81 kN	18,200	***S-NVD-44***	***O-NVD-01***
6"	*SBC600SS*	92 kN	20,700	***S-N6D-44***	***O-N6D-01***
6"	*SBC600SSFL*	92 kN	20,700	***S-N6D-44***	***O-N6D-01***
8"	*SBC800SSFL*	165 kN	37,000	***S-N8D-44***	***O-N8D-01***

ratings and kits for the standard marine breaking bolt series

Size	Used On *Stainless Steel*	kN rating	Pounds Force	Kits	
				Standard Bolt	*FKM O-ring*
2"	*MSBC200SS*	13 kN	2900	***S-N2M-44***	***O-ND2-01***
3"	*MSBC300SS*	33 kN	7500	***S-N4M-44***	***O-ND4-01***
4"	*MSBC400SS*	52 kN	11,700	***S-N5M-44***	***O-ND5-01***
5"	*MSBC500SS*	81kN	18,200	***S-NVM-44***	***O-NVM-01***
6"	*MSBC600SS*	92 kN	20,700	***S-N6M-44***	***O-N6M-01***
6"	*MSBC600SSFL*	92 kN	20,700	***S-N6M-44***	***O-N6M-01***
8"	*MSBC800SSFL*	165 kN	37,000	***S-N8M-44***	***O-N8M-01***

Scan
For more information on
Dry Disconnect Repair Kits.

Safety Break-Away Couplings

Flow Diagram (Pressure Drop)

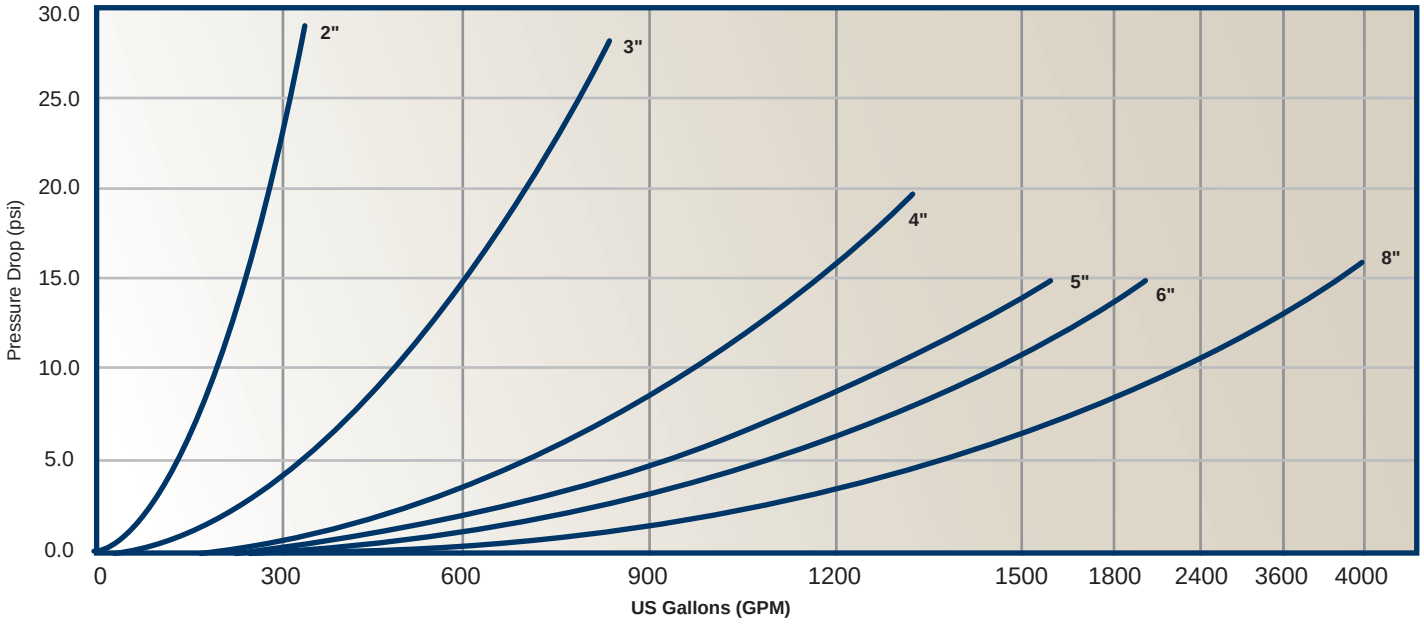

Test Fluid: n-paraffin **Temperature:** 70°F **Density:** 100 oz/gal **Viscosity:** 1,75 cps

Product Application

products in use at a facility

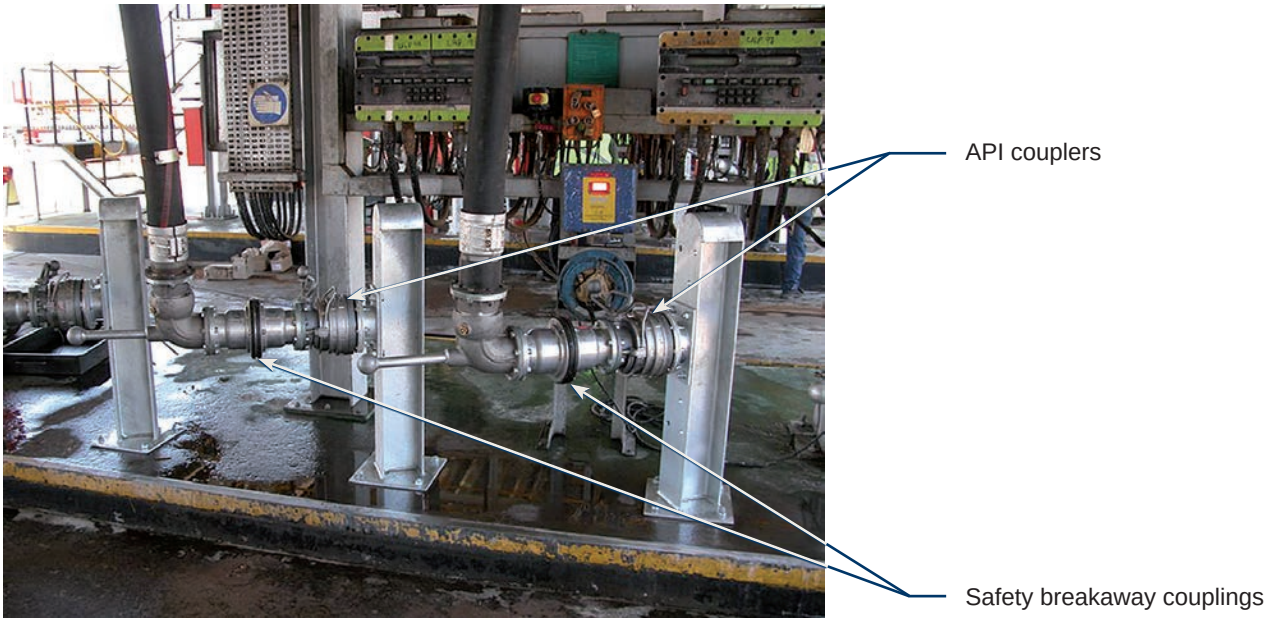

Bayloc™ Actuator Style Fittings

couplers

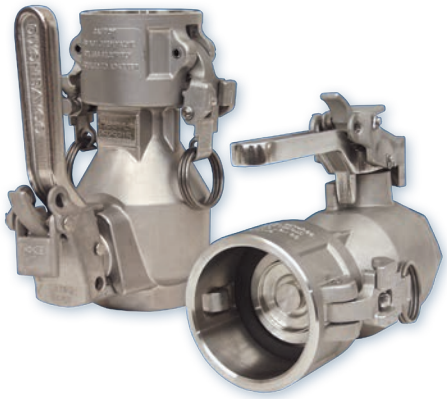

1½" and 2" - stainless steel

Applications: The D2C style couplers work with the DBA adapters (*page 14*) for applications where automatic closure for the coupler is not desired. This coupler is suited to vapor recovery, suction pump line and applications where it is necessary to easily drain the hose or piping for clean out. It can also be used when product retention in hose or pipe is desired but damage from accidental spill from an open coupler is not a concern.

Features:

- 316 stainless steel body
- 304 stainless steel internal components
- EZ Boss-Lock cam arms
- stainless steel locking lever included
- available with Buna, FKM, FKM-B, EPDM, PTFE encapsulated Silicone and PTFE encapsulated FKM seals

actuator style couplers

Size	Seal Material	*Stainless Steel*
1½"	Buna	***D2C71-150***
2"		***D2C71-200***
1½"	FKM	***D2C72-150***
2"		***D2C72-200***
1½"	PTFE encapsulated Silicone	***D2C73-150***
2"		***D2C73-200***
1½"	EPDM	***D2C74-150***
2"		***D2C74-200***
1½"	PTFE encapsulated FKM	***D2C77-150***
2"		***D2C77-200***
1½"	FKM-B	***D2C79-150***
2"		***D2C79-200***

API Bottom Rack Loading Fittings

couplers

Dixon Bayco's API coupler uses a snap on connection where the coupling action is automatic upon contact with the API adapter. The coupler is completely modular so it can be built with various face seal combinations to be compatible with different alternative fuel, performance levels and applications. Two models are available: bonded nose seal and replaceable nose seal.

Features:

- 4" TTMA inlet mounting flange
- 5 cam design for easy alignment and tight connection
- ball-end handle for easy, comfortable operation
- no special tools needed for maintenance
- shaft seals can be changed without removing coupler from loading arm
- fully compliant with API RP1004:2003 specifications
- fully interlocked collar can not be opened when connected and can not be disconnected when opened
- one piece bonded nose seal ensures long life and cannot be washed out
- optional replaceable nose seal for quick replacement without removal from loading arm
- body: hard coated anodized AL 356 T6
- shroud: hard coated anodized AL 356 T6 with stainless steel insert
- link, shaft, pin and crank: hardened 17-4PH stainless steel
- cam: CF8M stainless steel
- poppet and bearing: ZA-12
- seal options: Buna, FKM-B, FKM GFLT
- weight: 20 lbs.
- maximum working pressure: **150 PSI**
- peak surge pressure: 350 PSI
- operating temperature:
  FKM seals: **-20°F** to **+400°F**
  Buna seals: **-20°F** to **+250°F**
- maximum flow rate: 600 GPM
- pressure drop: 3 to 4 PSI

API couplers

Seal Material	*Bonded Nose Seal #*	*Replaceable Nose Seal #*
Buna	***5300***	***5400***
FKM-B	***5300B***	***5400B***
FKM GFLT	***5300G***	***5400G***
FKM-B with stainless wave spring	***5300BC***	***---***

Chemical Compatibility
(Buna seals)**:**

- gasoline
- diesel
- 10% ethanol
- B2 biodiesel blends

Chemical Compatibility
(FKM-B seals)**:**

- gasoline
- diesel
- jet fuel
- avgas
- 100% ethanol
- 100% methanol
- 100% biodiesel
- any blend of the above fluids

bonded nose seal model - 5300

More Information on Dry Disconnect Products

Dixon Customer Service

Facebook Page

YouTube Videos

Dixon is recognized as the premier manufacturer and supplier of hose fittings and accessories spanning a wide range of industrial uses. Dixon's range includes products for food, dairy processing, beverage and brewery, mobile tankers, mining, construction, chemical processing, petroleum, oilfields, refining and manufacturing.

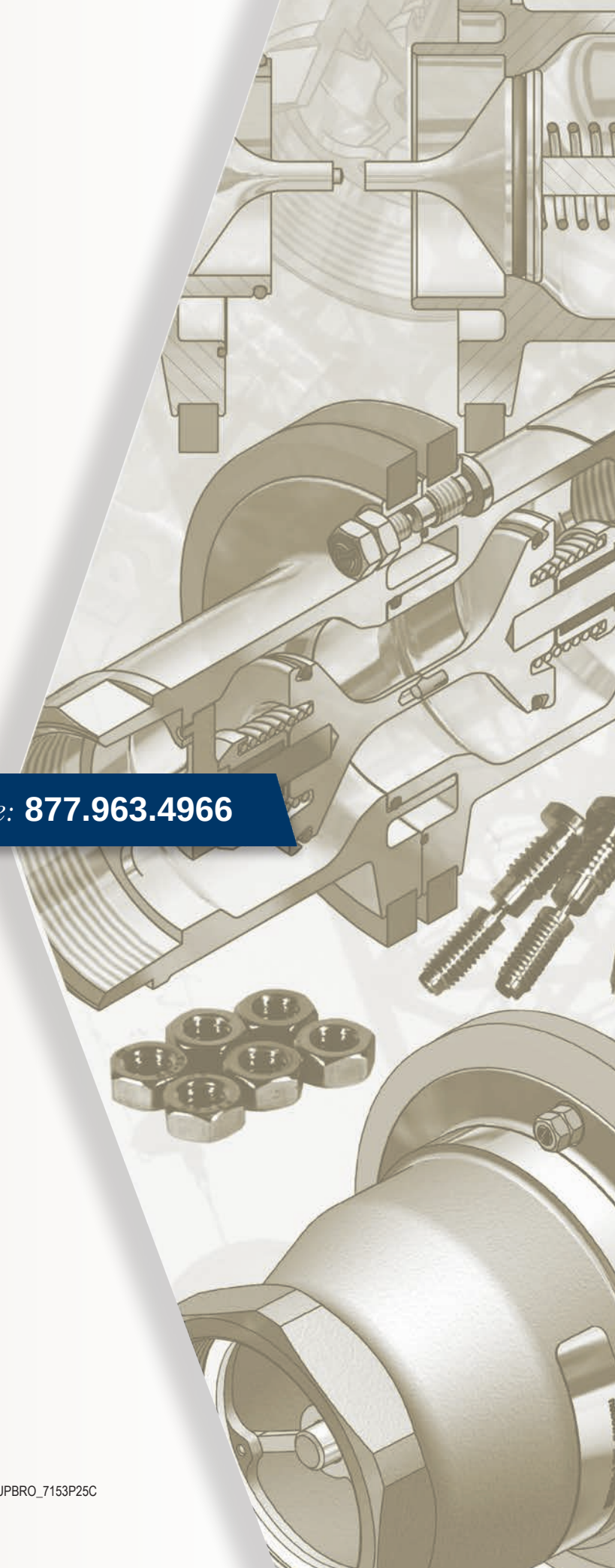

dixonvalve.com • *Customer Service:* **877.963.4966**

DIXON

The Right Connection®

Dixon Valve

800 High Street, Chestertown, MD 21620

Fax: 800.283.4966

© 2015 DVCC

Printed in the USA

DRYDISCOUPBRO_7153P25C