nexen®

AIR CHAMP® PRODUCTS

User Manual

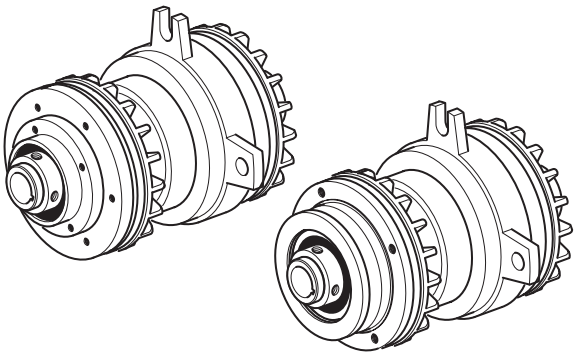

PILOT, COUPLING, AND SHEAVE MOUNT CLUTCH-BRAKE

MODELS FWCB, LWCB, MWCB, AND HWCB

CE

RoHS compliant

FORM NO. L-20016-Z-0415

In accordance with Nexen's established policy of constant product improvement, the specifications contained in this manual are subject to change without notice. Technical data listed in this manual are based on the latest information available at the time of printing and are also subject to change without notice.

Technical Support: 800-843-7445
(651) 484-5900

www.nexengroup.com

DANGER

Read this manual carefully before installation and operation. Follow Nexen's instructions and integrate this unit into your system with care. This unit should be installed, operated and maintained by qualified personnel ONLY. Improper installation can damage your system, cause injury or death. Comply with all applicable codes.

This document is the original, non-translated, version.

Conformity Declaration: In accordance with Appendix II B of CE Machinery Directive (2006/42/EC):

A Declaration of Incorporation of Partly Completed Machinery evaluation for the applicable EU directives was carried out for this product in accordance with the Machinery Directive. The declaration of incorporation is set out in writing in a separate document and can be requested if required.

This machinery is incomplete and must not be put into service until the machinery into which it is to be incorporated has been declared in conformity with the applicable provisions of the Directive.

Nexen Group, Inc.
560 Oak Grove Parkway
Vadnais Heights, Minnesota 55127

ISO 9001 Certified

TABLE OF CONTENTS

GENERAL SPECIFICATIONS

Specifications	
Torque:	Clutch up to 294 Nm (2600 in-lbs) Brake up to 316 Nm (2800 in-lbs)
Actuation Pressure:	1 - 5.5 bar (14.5 - 80 psi)
Service Temperature:	4.5 - 104 C (40 - 220 F)
Approximate Weight:	Up to 64.5 kg (142 lbs)

GENERAL SAFETY PRECAUTIONS

⚠ CAUTION

Use lifting aids and proper lifting techniques when installing, removing, or placing this product in service.

⚠ CAUTION

Use appropriate guarding for moving components. Failure to guard could result in serious bodily injury.

⚠ CAUTION

Watch for sharp features when interacting with this product. The parts have complex shapes and machined edges.

⚠ CAUTION

This product has possible pinch points. Care should be taken when interacting with this product.

⚠ WARNING

This product is capable of emitting a spark if misused therefore is not recommended for use in any explosive environment.

⚠ WARNING

Ensure proper guarding of the product is used. Nexen recommends the machine builder design guarding in compliance with OSHA 29 CFR 1910 “Occupational Safety and Health Hazards”.

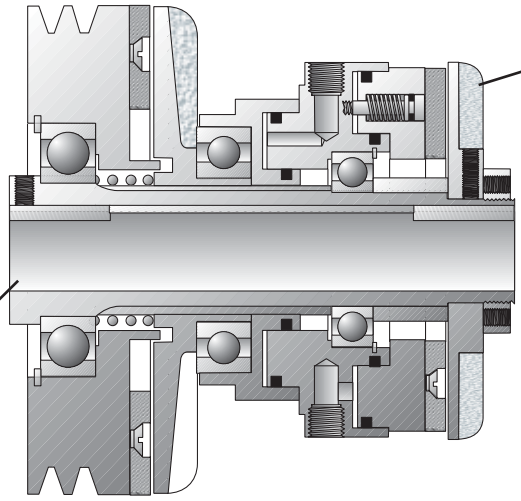

⚠ CAUTION

Surface temperature may exceed safe handling limits during operation. Do not touch.

⚠ CAUTION

Use appropriate guarding for moving components. Failure to guard could result in serious bodily injury.

PILOT MOUNT CLUTCH-BRAKE

Refer to Figure 1.

NOTE

These are "hub-stop" clutch-brakes. They stop the shaft on which they are mounted. Therefore, they must be mounted on the driven shaft.

1. Secure a customer supplied sheave or sprocket to the Clutch-Brake.
2. Insert the first Key (Item 30) into the shaft.
3. Slide the Clutch-Brake onto shaft and key; then, insert the second Key (Item 30).
4. Tighten Set Screws (Items 27 and 28) to the recommended torque (See Table 1).

NOTE

If a bushing for smaller diameter shafts is required, use a bushing on both ends of the Clutch-Brake.

5. Align air inlet ports to a six o'clock down position to allow condensation to drain out of exhaust port.
6. Fasten one of the ears of the Clutch-Brake to a fixed member of the machine.

NOTE

The Piston Air Chamber (Item 7) floats axially approximately 1/16 inch [1.59 mm] during operation. Make sure securing pin allows 1/16 inch to 1/8 inch [1.59 mm to 3.18 mm] movement of Piston Air Chamber.

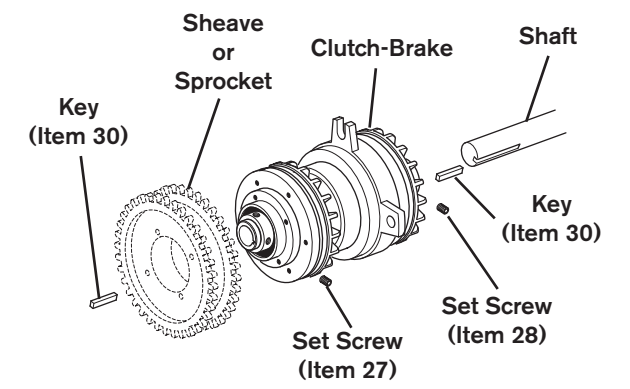

FIGURE 1

TABLE 1
RECOMMENDED TIGHTENING TORQUES

DESCRIPTION	FWCB	LWCB	MWCB	HWCB
Set Screw (Item 27)	35 In. Lbs. [3.9 N•m]	80 In. Lbs. [8.9 N•m]	80 In. Lbs. [8.9 N•m]	23 Ft. Lbs. [31.2 N•m]
Set Screw (Item 28)	20 In. Lbs. [2.2 N•m]	20 In. Lbs. [2.2 N•m]	80 In. Lbs. [8.9 N•m]	– – – –

COUPLING MOUNT CLUTCH-BRAKE

Refer to Figure 2.

1. Determine the parallel misalignment of shafts to be coupled by placing a straight edge across the shafts and measuring the maximum offset at various points around the periphery of the shafts. Make the necessary corrections to keep the shafts within parallel misalignment limits of the clutch coupling (See Table 2).

NOTE

Before installation, the driving shaft can be fixed but the driven shaft must be allowed to "float".

Align the air inlet ports to the six o'clock down position to allow condensation to drain out of the exhaust port.

2. Insert the first Key (Item 30) into driven shaft.
3. Slide Clutch-Brake Assembly onto the driven shaft.
4. Insert second Key (Item 30).
5. Install and tighten Set Screws (Items 27 and 28) to the recommended torque (See Table 3).
6. Attach the Coupling Adapter Plate (Item 24) to the Clutch-Brake pilot using Cap Screws (Item 33) and Lock Washers (Item 34); then, tighten the Cap Screws to the recommended torque (See Table 3).
7. Place the Coupling's Flexible Disc (Item 25) over the pins in the Coupling Adapter Plate (Item 24).
8. Insert the customer supplied Dodge™ Taper-Lock Bushing into the Coupling Hub (Item 26).
9. Align the holes (not the threads) and slide the Dodge™ Taper-Lock Bushing Assembly onto the driving shaft until it is flush with the shaft.
10. Thread the screws into threaded holes in the Dodge™ Taper-Lock Bushing and Coupling Hub (Item 26); then, alternately and evenly tighten the screws to the bushing manufacturer's specifications.
11. Align the pins in the Coupling Hub (Item 26) with the holes in the Flexible Disc (Item 25).
12. Push the entire assembly together. Automatic spacing is accomplished by spacers molded into the Flexible Disc.
13. Fasten one of the ears of the Clutch-Brake to a fixed member of the machine.

NOTE

The Piston Air Chamber (Item 7) floats laterally approximately 1/16 inch [1.59 mm] during operation. Make sure the securing pin allows 1/16 inch to 1/8 inch [1.59 mm to 3.18 mm] movement.

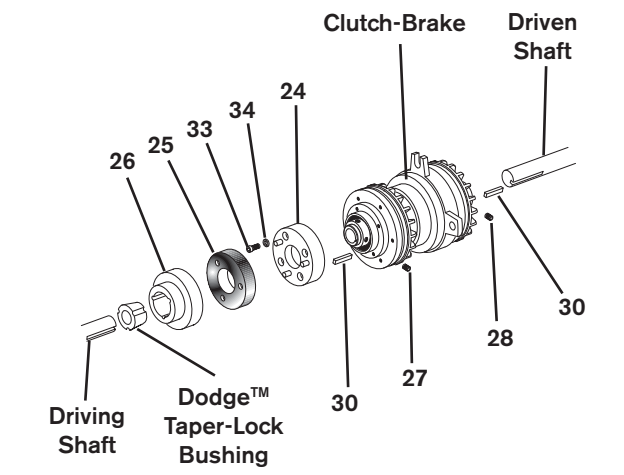

FIGURE 2

TABLE 2

Model	Dodge™ Taper-Lock Poly-Disk Coupling Size	Measured Variation @ Points 180° Apart		Axial Float (Minimum Value From Recommended Initial Spacing)
		Parallel Maximum	Angular Maximum	
FWCB	2-5/8 In. [66.75mm]	0.015 In. [0.381 mm]	0.040 In. [1.016 mm]	+1/8 In. [+1.375 mm]
LWCB	4 In. [101.6 mm]	0.015 In. [0.381 mm]	0.064 In. [1.625 mm]	+1/8 In. [+1.375 mm]
MWCB	7 In. [177.8 mm]	0.015 In. [0.381 mm]	0.112 In. [2.845 mm]	+1/8 In. [+1.375 mm]
HWCB	8 In. [203.2 mm]	0.015 In. [0.381 mm]	0.128 In. [3.251 mm]	+1/8 In. [+1.375 mm]

TABLE 3
RECOMMENDED TIGHTENING TORQUES

Description	FWCB	LWCB	MWCB	HWCB
Set Screw (Item 27)	35 In. Lbs. [3.9 N·m]	80 In. Lbs. [8.9 N·m]	80 In. Lbs. [8.9 N·m]	23 Ft. Lbs. [3.9 N·m]
Set Screw (Item 28)	20 In. Lbs. [2.2 N·m]	20 In. Lbs. [2.2 N·m]	80 In. Lbs. [8.9 N·m]	– –
Cap Screw (Item 33)	21 Ft. Lbs. [28.5 N·m]	21 Ft. Lbs. [28.5 N·m]	23 Ft. Lbs. [31.2 N·m]	78 Ft. Lbs. [105.8 N·m]

SHEAVE MOUNT CLUTCH-BRAKE

Refer to Figure 3.

1. Insert the first Key (Item 30) into the shaft.
2. Slide the Clutch-Brake onto shaft and key; then, insert the second Key (Item 30).
3. Tighten Set Screws (Items 27 and 28) to the recommended torque (See Table 4).

NOTE

If a bushing for smaller diameter shafts is required, use a bushing on both ends of the Clutch-Brake.

4. Align air inlet ports to a six o'clock down position to allow condensation to drain out of exhaust port.
5. Fasten one of the ears of the Clutch-Brake to a fixed member of the machine.

NOTE

The Piston Air Chamber (Item 7) floats laterally approximately 1/16 inch [1.59 mm] during operation. Make sure securing pin allows 1/16 inch to 1/8 inch [1.59 mm to 3.18 mm] movement of Piston Air Chamber.

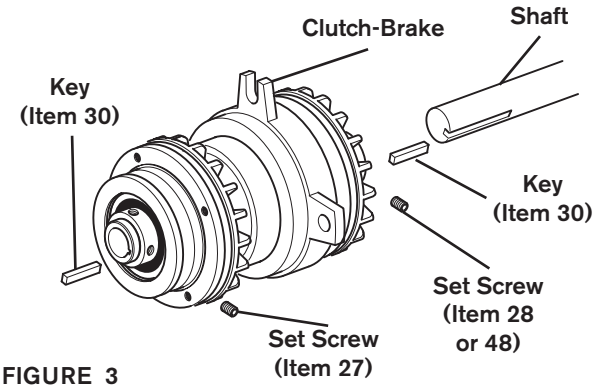

FIGURE 3

TABLE 4
RECOMMENDED TIGHTENING TORQUES

DESCRIPTION	FWCB	LWCB	MWCB	HWCB
Set Screw (Item 27)	35 In. Lbs. [3.9 N•m]	80 In. Lbs. [8.9 N•m]	80 In. Lbs. [8.9 N•m]	23 Ft. Lbs. [31.2 N•m]
Set Screw (Item 28)	20 In. Lbs. [2.2 N•m]	20 In. Lbs. [2.2 N•m]	80 In. Lbs. [8.9 N•m]	– – – –

LUBRICATION

NOTE

Nexen pneumatically actuated devices require clean, pressure regulated air for maximum performance and life. All seals in Nexen pneumatically operated devices are lubricated for life, and do not require additional lubrication.

However, some customers prefer to use an air line lubricator, which injects oil into the pressurized air, forcing an oil mist into the air chamber. This is acceptable, but care must be taken to ensure once an air mist lubrication system is used, it is continually used over the life of the product as the oil mist may wash free the factory installed lubrication.

Locate the lubricator above and within ten feet of the product, and use low viscosity oil such as SAE-10.

Synthetic lubricants are not recommended.

Nexen product's bearings are shielded and pre-lubricated, and require no further lubrication.

LUBRICATOR DRIP RATE SETTINGS

⚠ CAUTION

These settings are for Nexen supplied lubricators. If you are not using a Nexen lubricator, calibration must follow the manufacturer's suggested procedure.

1. Close and disconnect the air line from the unit.
2. Turn the Lubricator Adjustment Knob counterclockwise three complete turns.
3. Open the air line.
4. Close the air line to the unit when a drop of oil forms in the Lubricator Sight Gage.
5. Connect the air line to the unit.
6. Turn the Lubricator Adjustment Knob clockwise until closed.
7. Turn the Lubricator Adjustment Knob counterclockwise one-third turn.
8. Open the air line to the unit.

AIR CONNECTIONS

All Nexen pneumatically actuated devices require clean and dry air, which meet or exceeds ISO 8573.1:2001 Class 4.4.3 quality.

NOTE

For quick response, Nexen recommends a quick exhaust valve and short air lines between the Control Valves and the product. Align the air inlet ports to a down position to allow condensation to drain out of the air chambers of the product.

The following are common air supply schemes used with this product. These are examples and not an all-inclusive list. All air circuits to be used with this product must be designed following ISO 4414 guidelines.

⚠ CAUTION

Low air pressure will cause slippage and overheating. Excessive air pressure will cause abrupt starts and stops, reducing product life.

Air Pressure (Gage) Limits
6.9 Bar (100 PSI) Absolute Max.
0 Bar (0 PSI) Absolute Min.

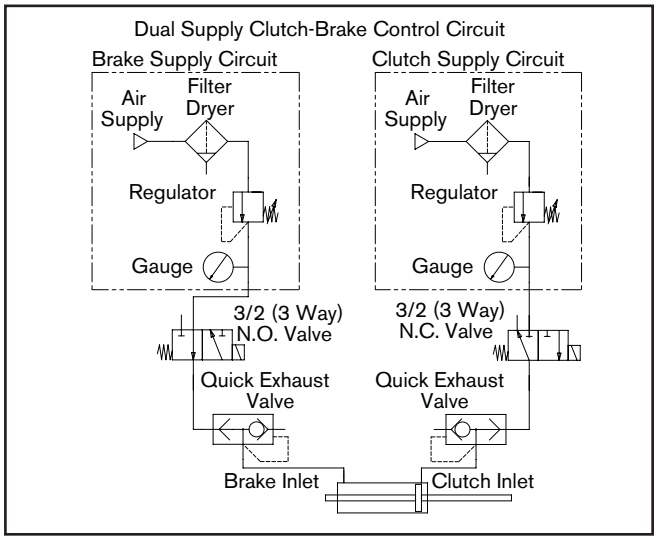

3/2 (3 Way)

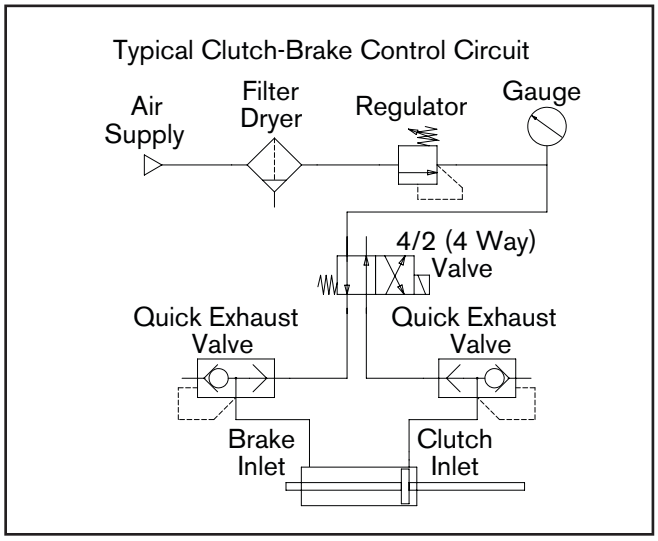

4/2 (4 Way)

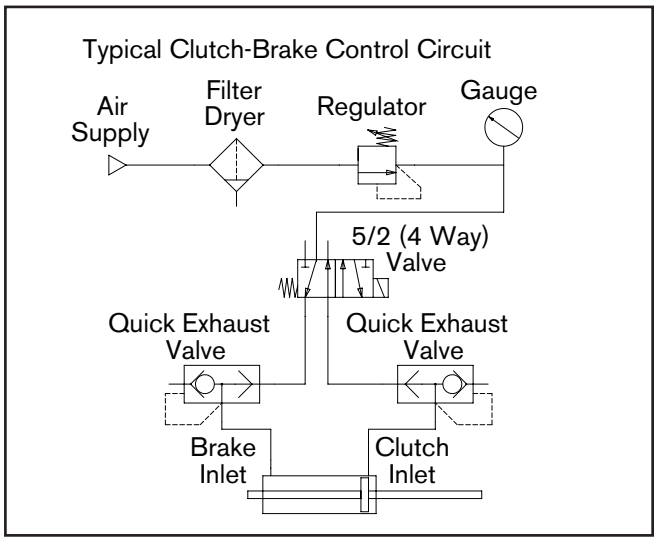

5/2 (4 Way)

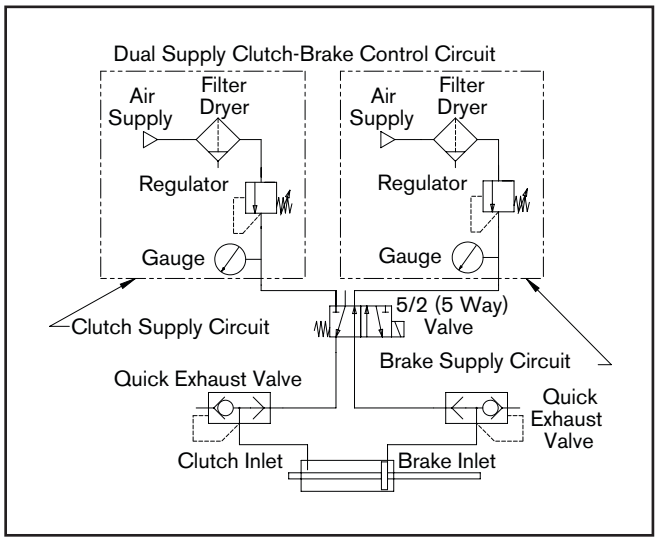

5/2 (5 Way)

⚠ WARNING

Never exceed maximum operating speeds listed for your product. (See Table 5).

⚠ CAUTION

Never exceed life of facing material. Facing life depends on the volume of material and the total energy over the life of the unit. Expected life (in hrs) can be found by: Time=Volume/(Power*Wear Rate).

⚠ CAUTION

The temperature limits for this product line are 4.5-100 Degree Celsius (40-220 Degree F).

TABLE 5

Sizes	Max RPM
FWCB	1,800
LWCB	1,800
MWCB	1,800
HWCB	1,800

⚠ WARNING

Ensure proper guarding of the product is used. Nexen recommends the machine builder design guarding in compliance with OSHA 29 CFR 1910 “Occupational Safety and Health Hazards”.

TROUBLESHOOTING

PROBLEM	PROBABLE CAUSE	SOLUTION
Failure to engage.	Air not getting to clutch-brake due to a control valve malfunction.	Check for control valve malfunction and replace valve if necessary.
	Air leaks.	Replace air lines.
	Lack of lubrication on the hub spline or in the air chamber.	Lubricate hub spline and/or air chamber.
	Rigid piping instead of flexible air lines.	Replace rigid piping with flexible air lines.
Failure to disengage.	Unexhausted air due to a control valve malfunction.	Check for control valve malfunction and replace if necessary.
	Friction lock due to a lack of lubrication on the hub spline or in the air chamber.	Lubricate hub spline and/or air chamber.
	Rigid piping instead of flexible air lines.	Replace air lines with flexible air line tubing.
	Weak or broken compression springs.	Replace compression springs.
Loss of torque.	Air leaks.	Replace air lines.
	Overheating (fading).	Check manufacturing specifications to be certain clutch-brake is suitable for application.
Overlap or simultaneous engagement of clutch and brake when switching. Overlap can be verified by motor amperage readings when cycling with the clutch-brake versus clutch (brake disconnected). Higher draw with the clutch-brake indicates overlap.	Inadequate controls.	Install controls meeting the specification of clutch-brake.
	Air line too long between valve and clutch-brake.	Shorten air line between valve and clutch-brake.
	Air pressure too high.	Reduce the air pressure.
	Lack of quick exhaust valves.	Install quick exhaust valves.

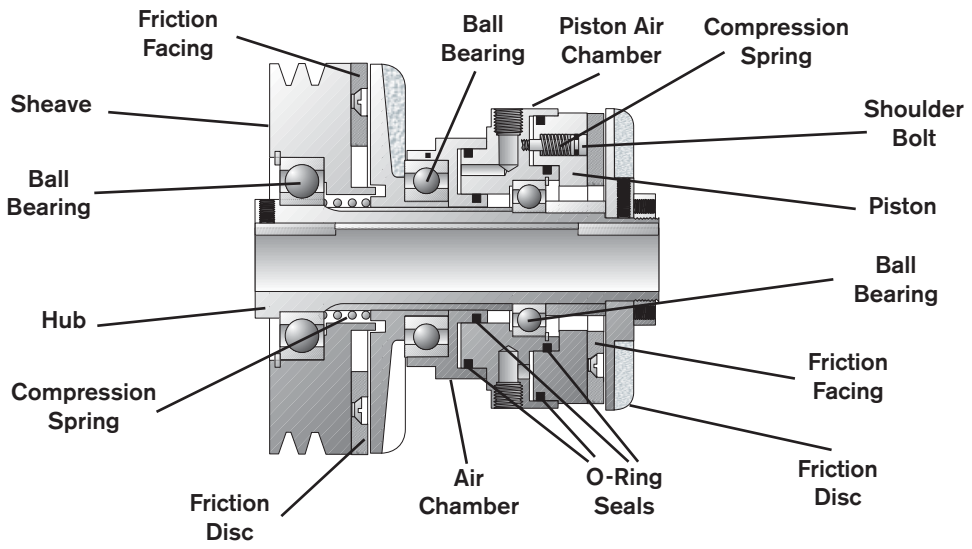

FIGURE 4
TYPICAL CLUTCH-BRAKE

DISASSEMBLY—PILOT, COUPLING, AND SHEAVE MOUNT

NOTE

The following sections are arranged by model. Verify that you are in the correct section for your model.

FWCB

Refer to Figures 5 - 8.

1. Loosen the Set Screw (Item 47) and remove the Hub Collar (Item 46) from the Clutch-Brake.

⚠ CAUTION

Working with spring loaded or tension loaded fasteners and devices can cause injury. Wear safety glasses and take the appropriate safety precautions.

2. Remove the Retaining Ring (Item 37) from the Clutch-Brake.
3. Press the Drive Disc Assembly or the Sheave Assembly off the Hub (Item 1).
4. Slide the Compression Spring (Item 11) off the Hub (Item 1).
5. Slide the Clutch Assembly off the Hub (Item 1).
6. Remove the old O-Ring Seals (Items 19 and 21).
7. Remove the Key (Item 35).
8. Remove the Retaining Ring (Item 37).
9. Loosen the Set Screw (Item 29) and remove the Locking Nut (Item 26) and slide the Brake Friction Disc (Item 2) off the Hub (Item 1).
10. Press the Brake Assembly off the Hub (Item 1).

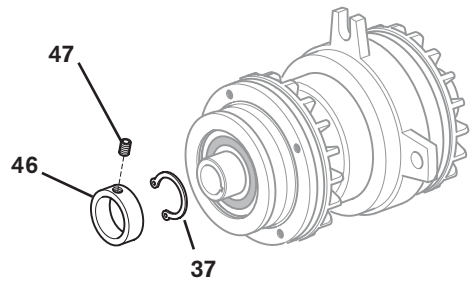

FIGURE 5

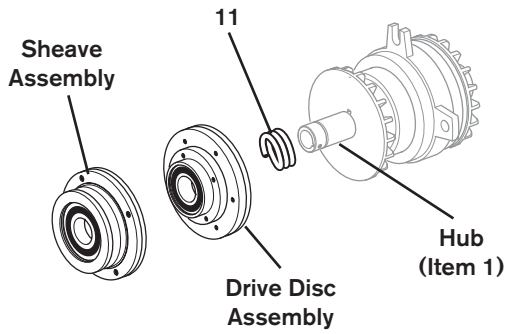

FIGURE 6

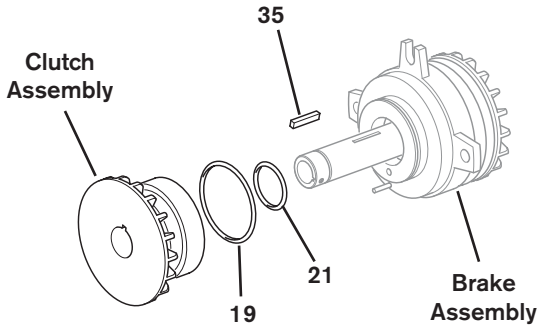

FIGURE 7

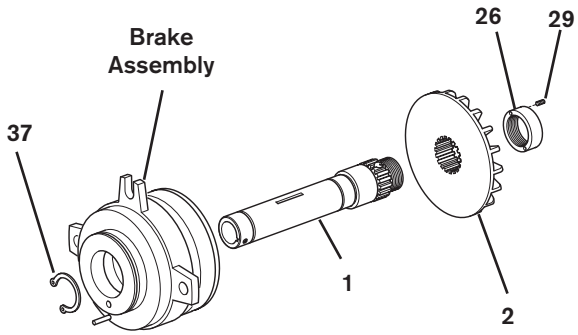

FIGURE 8

LWCB AND MWCB

Refer to Figures 9 & 10.

1. Loosen the Set Screws (Items 28 and 29); then, remove the Locking Nut (Item 26) and the Brake Friction Disc (Item 2).
2. Remove the Spacer (Item 16).
3. Press the Brake Assembly off the Hub (Item 1).
4. Remove the O-Ring Seals (Items 19 and 21).
5. Slide the Clutch Assembly off the Hub (Item 1).
6. Slide the Compression Spring (Item 11) off the Hub (Item 1).
7. Press the Drive Disc Assembly or the Sheave Assembly off the Hub (Item 1).

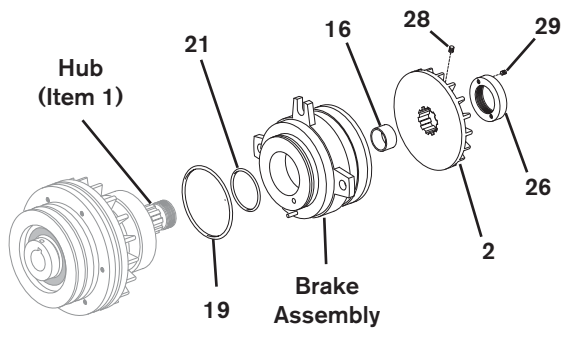

FIGURE 9

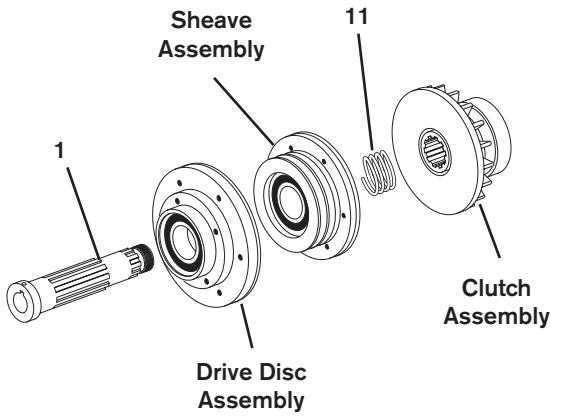

FIGURE 10

HWCB

⚠ CAUTION

Working with spring loaded or tension loaded fasteners and devices can cause injury. Wear safety glasses and take the appropriate safety precautions.

Refer to Figures 11 & 12.

1. Remove the Retaining Ring (Item 45) from the Clutch-Brake.
2. Loosen the Set Screw (Item 28) and the Socket Head Cap Screw (Item 47) securing the Locking Collar (Item 46); then, remove the Locking Collar (Item 46) and the Brake Friction Disc (Item 44).
3. Remove the Spacer (Item 16).
4. Press the Brake Assembly off the Hub (Item 43).
5. Remove the O-Ring Seals (Items 19 and 21).
6. Slide the Clutch Assembly off the Hub (Item 43).
7. Slide the Compression Spring (Item 11) off the Hub (Item 43).
8. Press the Drive Disc Assembly or the Sheave Assembly off the Hub (Item 43).

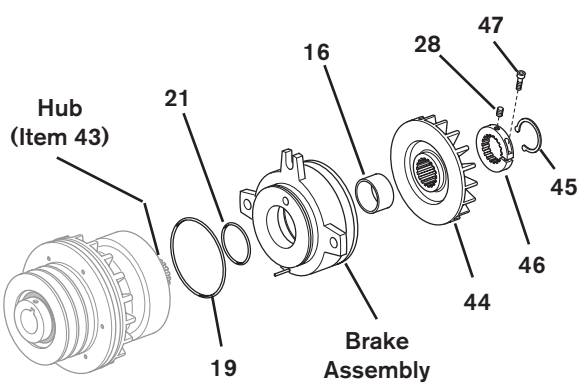

FIGURE 11

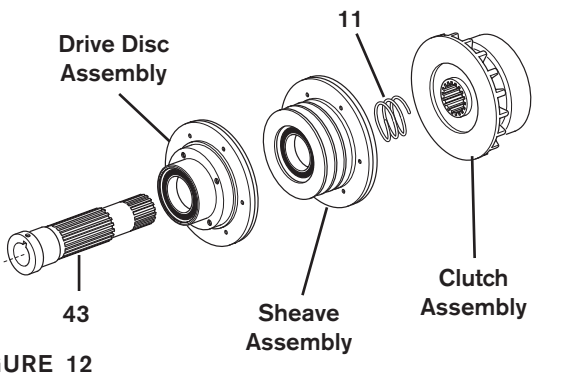

FIGURE 12

NOTE

The following sections are arranged by model. Verify that you are in the correct section for your model.

FWCB

⚠ CAUTION

Working with spring loaded or tension loaded fasteners and devices can cause injury. Wear safety glasses and take the appropriate safety precautions.

Refer to Figures 13 - 16.

1. Remove the Retaining Ring (Item 41) from the Sheave (Item 12) or Pilot Drive Disc (Item 33).

2. Press the old Ball Bearing (Item 13) out of the Sheave (Item 12) or old Ball Bearing (Item 34) out of the Pilot Drive Disc (Item 33).

NOTE

Do not reuse the old ball bearings. Applying force on the inner race of a ball bearing to remove a ball bearing held by the outer race causes damage to the bearing.

3. Clean the bearing bore of the Sheave (Item 12) or Pilot Drive Disc (Item 33) with fresh safety solvent, making sure all old Loctite residue is removed.

4. Apply an adequate amount of Loctite® 680 to evenly coat the outer race of the new Ball Bearing (Item 13 or 34).

5. Support the Sheave (Item 12) or the Pilot Drive Disc (Item 33) and pressing on the outer race of the new Ball Bearing (Item 13 or 34), press the new Ball Bearing (Item 13 or 34) into the Sheave or Pilot Drive Disc.

6. Reinstall the Retaining Ring (Item 41).

NOTE

The Flat Head Machine Screws are assembled with an anaerobic locking compound. Inserting a properly fitting screwdriver into the head of the Flat Head Machine Screw and striking the end of the screwdriver with a hammer will break the crystalline structure of this locking compound and allow removal of the Flat Head Machine Screws. Never use an impact wrench to remove the Flat Head Machine Screws.

7. Remove the old Flat Head Machine Screws (Item 24) securing the Friction Facing (Item 4) to the Sheave (Item 12) or Pilot Drive Disc (Item 33).

8. Remove the old Friction Facing (Item 4).

9. Install the new Friction Facing (Item 4) and tighten the new Flat Head Machine Screws (Item 24) to 26 In. Lbs. [2.9 Nm] torque.

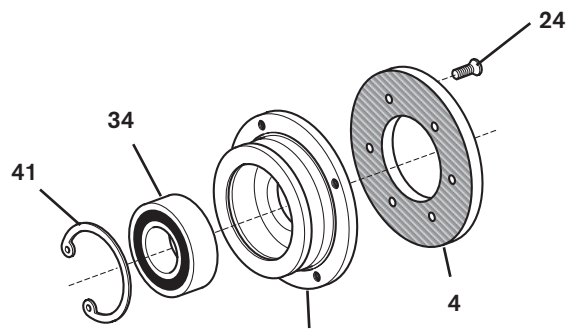

FIGURE 13
SHEAVE MOUNT

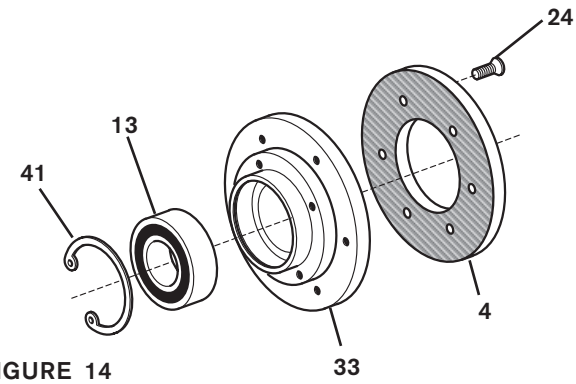

FIGURE 14
PILOT MOUNT

10. Fully support the Air Chamber (Item 8) and press the Clutch Friction Disc (Item 9) out of the Air Chamber.

NOTE

If the Ball Bearing (Item 14) comes out of the Air Chamber (Item 8), use a bearing puller to remove it from the Clutch Friction Disc (Item 9). If the Ball Bearing remains in the Air Chamber (Item 8), use a die remover to remove it from the Air Chamber.

11. Clean the bearing bore of the Air Chamber (Item 8) with fresh safety solvent, making sure all old Loctite® residue is removed.

12. Apply an adequate amount of Loctite® 680 to evenly coat the outer race of the new Ball Bearing (Item 14).

13. Carefully align the O.D. of the new Ball Bearing (Item 14) with the bore of the Air Chamber (Item 8) and press the new Ball Bearing into place.

14. Carefully align the hub of the Clutch Friction Disc (Item 9) with the bore of the new Ball Bearing (Item 14) and press the Clutch Friction Disc into the new Ball Bearing and Air Chamber (Item 8).

15. Remove the old Flat Head Machine Screws (Item 24) and Friction Facing (Item 4) from the Piston (Item 3).

⚠ CAUTION

Working with spring loaded or tension loaded fasteners and devices can cause injury. Wear safety glasses and take the appropriate safety precautions.

16. Remove the old Shoulder Bolts (Item 5), Shoulder Bolt O-Rings (Item 22), and Compression Springs (Item 6).

17. Separate the Piston Air Chamber (Item 7) and Piston (Item 3).

18. Remove the old O-Ring Seals (Items 18 and 20) from the Piston Air Chamber (Item 7) and Piston (Item 3).

19. Remove the Retaining Ring (Item 17).

20. Press the old Ball Bearing (Item 13) out of the Piston Air Chamber (Item 7).

21. Clean the bearing bore of the Piston Air Chamber (Item 7) with fresh safety solvent, making sure all old Loctite® residue is removed.

22. Apply an adequate amount of Loctite® 680 to evenly coat the outer race of the new Ball Bearing (Item 13).

23. Carefully align the O.D. of the new Ball Bearing (Item 13) with the bore of the Piston Air Chamber and press the new Ball Bearing into place.

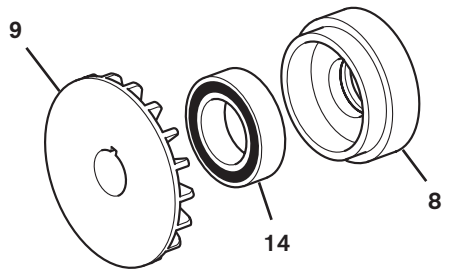

FIGURE 15

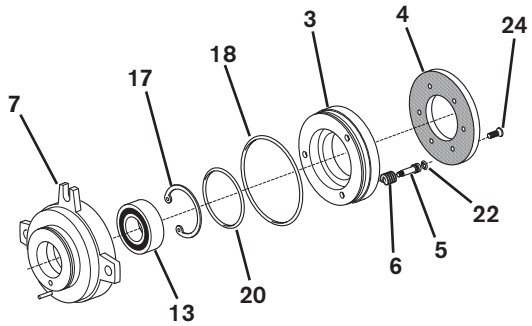

FIGURE 16

24. Reinstall the Retaining Ring (Item 17).

25. Clean all O-Ring grooves and O-Ring contact surfaces with fresh safety solvent and lubricate the O-Ring grooves and contact surfaces with fresh O-Ring lubricant.

26. Lubricate the new O-Ring Seals (Items 18, 20, and 22) with fresh O-Ring lubricant and install the new O-Ring Seals.

27. Press the Piston (Item 3) into the Piston Air Chamber (Item 7).

28. Apply Loctite® 242 to the threads of the Shoulder Bolts (Item 5); then, install the new Compression Springs (Item 6) and Shoulder Bolts (Item 5) with new O-Ring Seals (Item 22).

29. Tighten the Shoulder Bolts (Item 5) to 43 In. Lbs. [4.8 Nm] torque.

30. Install the new Friction Facing (Item 4) and tighten the new Flat Head Machine Screws (Item 24) to 26 In. Lbs. [2.9 Nm] torque.

LWCB AND MWCB

Refer to Figures 17 - 20.

⚠ CAUTION

Working with spring loaded or tension loaded fasteners and devices can cause injury. Wear safety glasses and take the appropriate safety precautions.

1. Remove the Retaining Ring (Item 41) from the Sheave (Item 12) or Pilot Drive Disc (Item 33).

2. Press the old Ball Bearing (Item 15) out of the Sheave (Item 12) or Ball Bearing (Item 34) out of the Pilot Drive Disc (Item 33).

NOTE

Do not reuse the old ball bearings. Applying force on the inner race of a ball bearing to remove a ball bearing held by the outer race causes damage to the bearing.

3. Clean the bearing bore of the Sheave (Item 12) or Pilot Drive Disc (Item 33) with fresh safety solvent, making sure all old Loctite® residue is removed.

4. Apply an adequate amount of Loctite® 680 to evenly coat the outer race of the new Ball Bearing (Item 15 or 34).

5. Support the Sheave (Item 12) or the Pilot Drive Disc (Item 33) and pressing on the outer race of the new Ball Bearing (Item 15 or 34), press the new Ball Bearing (Item 15 or 34) into the Sheave or Pilot Drive Disc.

6. Reinstall the Retaining Ring (Item 41).

NOTE

The Flat Head Machine Screws are assembled with an anaerobic locking compound. Inserting a properly fitting screwdriver into the head of the Flat Head Machine Screw and striking the end of the screwdriver with a hammer will break the crystalline structure of this locking compound and allow removal of the Flat Head Machine Screws. Never use an impact wrench to remove the Flat Head Machine Screws.

On the LWCB, the Flat Head Machine Screws securing the Friction Facing (Item 10) are Item 24. On the MWCB, the Flat Head Machine Screws securing the Friction Facing (Item 10) are Item 25.

7. Remove the old Flat Head Machine Screws (Item 24 or 25) securing the Friction Facing (Item 10) to the Sheave (Item 12) or Pilot Drive Disc (Item 33).

8. Remove the old Friction Facing (Item 10).

9. Install the new Friction Facing (Item 10) and tighten the new Flat Head Machine Screws (Item 24 or 25) to 26 In. Lbs. [2.9 Nm] torque.

10. Fully support the Air Chamber (Item 8) and press the Clutch Friction Disc (Item 9) out of the Air Chamber.

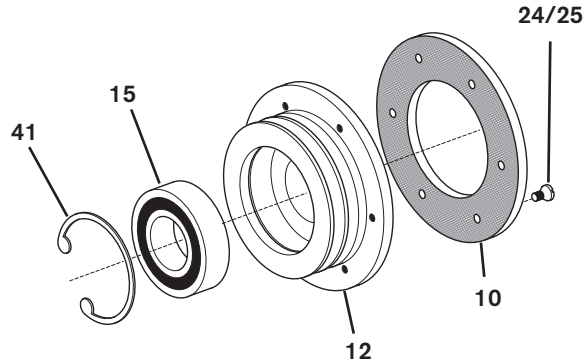

FIGURE 17
SHEAVE MOUNT

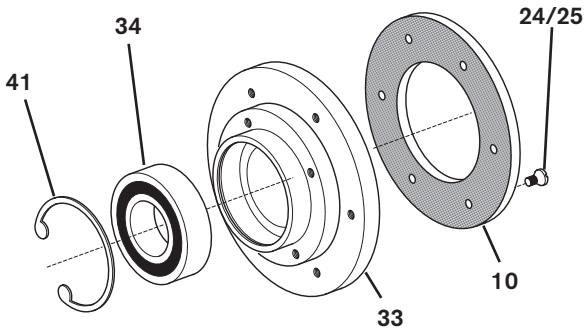

FIGURE 18
PILOT MOUNT

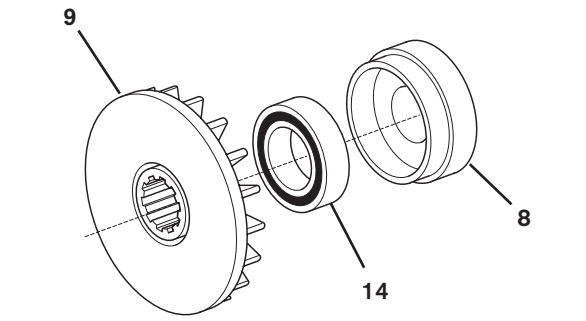

FIGURE 19

NOTE

If the Ball Bearing (Item 14) comes out of the Air Chamber (Item 8), use a bearing puller to remove it from the Clutch Friction Disc (Item 9). If the Ball Bearing remains in the Air Chamber (Item 8), use a die remover to remove it from the Air Chamber.

11. Clean the bearing bore of the Air Chamber (Item 8) with fresh safety solvent, making sure all old Loctite® residue is removed.

12. Apply an adequate amount of Loctite® 680 to evenly coat the outer race of the new Ball Bearing (Item 14).

13. Carefully align the O.D. of the new Ball Bearing (Item 14) with the bore of the Air Chamber (Item 8) and press the new Ball Bearing into place.

14. Carefully align the hub of the Clutch Friction Disc (Item 9) with the bore of the new Ball Bearing (Item 14) and press the Clutch Friction Disc into the new Ball Bearing and Air Chamber (Item 8).

15. Remove the old Flat Head Machine Screws (Item 24) and Friction Facing (Item 4) from the Piston (Item 3).

⚠ CAUTION

Working with spring loaded or tension loaded fasteners and devices can cause injury. Wear safety glasses and take the appropriate safety precautions.

16. Remove the Shoulder Bolts (Item 5), Shoulder Bolt O-Rings (Item 22), and Compression Springs (Item 6).

17. Separate the Piston Air Chamber (Item 7) and Piston (Item 3).

18. Remove the old O-Ring Seals (Items 18 and 20) from the Piston Air Chamber (Item 7) and Piston (Item 3).

19. Remove the Retaining Ring (Item 17).

20. Press the old Ball Bearing (Item 13) out of the Piston Air Chamber (Item 7).

21. Clean the bearing bore of the Piston Air Chamber (Item 7) with fresh safety solvent, making sure all old Loctite® residue is removed.

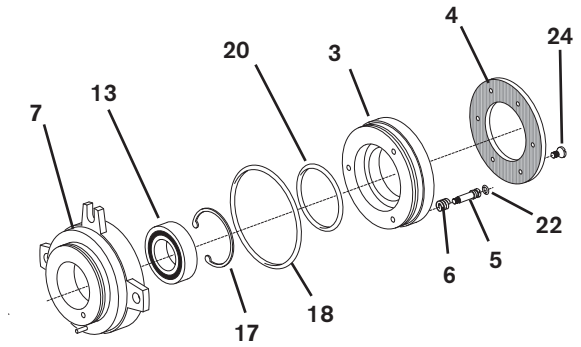

FIGURE 20

22. Apply an adequate amount of Loctite® 680 to evenly coat the outer race of the new Ball Bearing (Item 13).

23. Carefully align the O.D. of the new Ball Bearing (Item 13) with the bore of the Piston Air Chamber and press the new Ball Bearing into place.

24. Reinstall the Retaining Ring (Item 17).

25. Clean all O-Ring grooves and O-Ring contact surfaces with fresh safety solvent and lubricate the O-Ring grooves and contact surfaces with fresh O-Ring lubricant.

26. Lubricate the new O-Ring Seals (Items 18, 20, and 22) with fresh O-Ring lubricant and install the new O-Ring Seals.

27. Press the Piston (Item 3) into the Piston Air Chamber (Item 7).

28. Apply Loctite® 242 to the threads of the Shoulder Bolts (Item 5); then, install the new Compression Springs (Item 6) and Shoulder Bolts (Item 5) with new O-Ring Seals (Item 22).

29. Tighten the Shoulder Bolts (Item 5) to 43 In. Lbs. [4.8 Nm] torque.

30. Install the new Friction Facing (Item 4) and tighten the new Flat Head Machine Screws (Item 24) to 26 In. Lbs. [2.9 Nm] torque.

HWCB

⚠ CAUTION

Working with spring loaded or tension loaded fasteners and devices can cause injury. Wear safety glasses and take the appropriate safety precautions.

Refer to Figures 21 - 24.

1. Remove the Retaining Ring (Item 41) from the Sheave (Item 12) or Pilot Drive Disc (Item 33).

2. Press the old Ball Bearings (Item 15) out of the Sheave (Item 12) or the Pilot Drive Disc (Item 33).

NOTE

Do not reuse the old ball bearings. Applying force on the inner race of a ball bearing to remove a ball bearing held by the outer race causes damage to the bearing.

3. Clean the bearing bore of the Sheave (Item 12) or Pilot Drive Disc (Item 33) with fresh safety solvent, making sure that all old Loctite® residue is removed.

4. Apply an adequate amount of Loctite® 680 to evenly coat the outer race of the new Ball Bearings (Item 15).

5. Support the Sheave (Item 12) or the Pilot Drive Disc (Item 33) and pressing on the outer race of the new Ball Bearings (Item 15), press the new Ball Bearings (Item 15) into the Shave or Pilot Drive Disc.

6. Reinstall the Retaining Ring (Item 41)

NOTE

The Flat Head Machine Screws are assembled with an anaerobic locking compound. Inserting a properly fitting screwdriver into the head of the Flat Head Machine Screw and striking the end of the screwdriver with a hammer will break the crystalline structure of this locking compound and allow removal of the Flat Head Machine Screws. Never use an impact wrench to remove the Flat Head Machine Screws.

7. Remove the old Flat Head Machine Screws (Item 24) securing the Friction Facing (Item 10) to the Sheave (Item 12) or Pilot Drive Disc (Item 33).

8. Remove the old Friction Facing (Item 10).

9. Install the new Friction Facing (Item 10) and tighten the new Flat Head Machine Screws (Item 24) to 43 In. Lbs. [4.8 Nm] torque.

10. Fully support the Air Chamber (Item 8) and press the Clutch Friction Disc (Item 9) out of the Air Chamber.

NOTE

If the Ball Bearing (Item 14) comes out of the Air Chamber (Item 8), use a bearing puller to remove it from the Clutch Friction Disc (Item 9). If the Ball Bearing remains in the Air Chamber (Item 8), use a die remover to remove it from the Air Chamber.

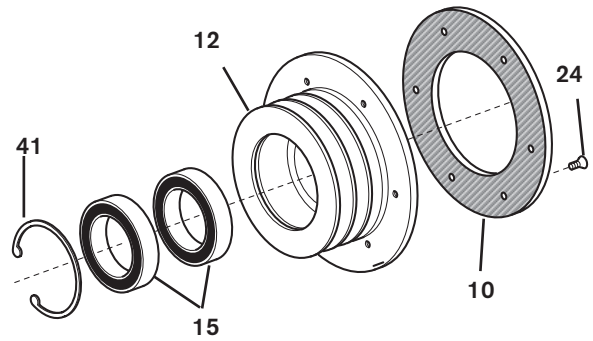

FIGURE 21
SHEAVE MOUNT

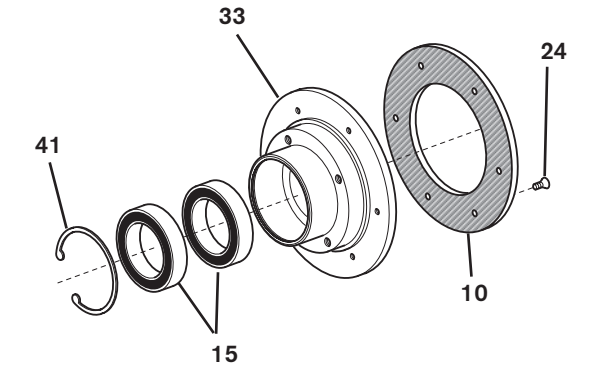

FIGURE 22
PILOT MOUNT

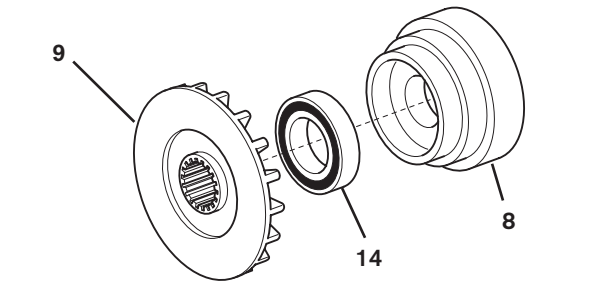

FIGURE 23

11. Clean the bearing bore of the Air Chamber (Item 8) with fresh safety solvent, making sure all old Loctite® residue is removed.

12. Apply an adequate amount of Loctite® 680 to evenly coat the outer race of the new Ball Bearing (Item 14).

13. Carefully align the O.D. of the new Ball Bearing (Item 14) with the bore of the Air Chamber (Item 8) and press the new Ball Bearing into place.

14. Carefully align the hub of the Clutch Friction Disc (Item 9) with the bore of the new Ball Bearing (Item 14) and press the Clutch Friction Disc into the new Ball Bearing and Air Chamber (Item 8)

.

15. Remove the old Flat Head Machine Screws (Item 24) and Friction Facing (Item 4) from the Piston (Item 3).

⚠ CAUTION

Working with spring loaded or tension loaded fasteners and devices can cause injury. Wear safety glasses and take the appropriate safety precautions.

16. Remove the Shoulder Bolts (Item 5), Shoulder Bolt O-Rings (Item 22), and Compression Springs (Item 6).

17. Separate the Piston Air Chamber (Item 7) and Piston (Item 3).

18. Remove the old O-Ring Seals (Items 18 and 20) from the Piston Air Chamber (Item 7) and Piston (Item 3).

19. Remove the Retaining Ring (Item 17).

20. Press the old Ball Bearing (Item 13) out of the Piston Air Chamber (Item 7).

21. Clean the bearing bore of the Piston Air Chamber (Item 7) with fresh safety solvent, making sure all old Loctite® residue is removed.

22. Apply an adequate amount of Loctite® 680 to evenly coat the outer race of the new Ball Bearing (Item 13).

23. Carefully align the O.D. of the new Ball Bearing (Item 13) with the bore of the Piston Air Chamber and press the new Ball Bearing into place.

24. Reinstall the Retaining Ring (Item 17).

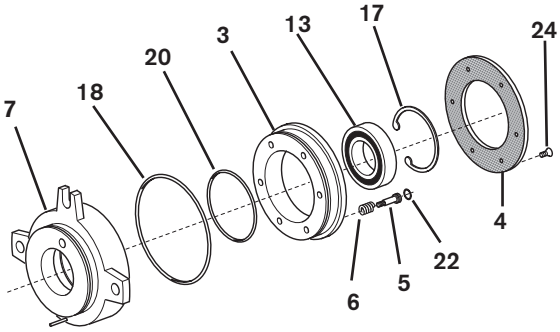

FIGURE 24

25. Clean all O-Ring grooves and O-Ring contact surfaces with fresh safety solvent and lubricate the O-Ring grooves and contact surfaces with fresh O-Ring lubricant.

26. Lubricate the new O-Ring Seals (Items 18, 20, and 22) with fresh O-Ring lubricant and install the new O-Ring Seals.

27. Press the Piston (Item 3) into the Piston Air Chamber (Item 7).

28. Apply Loctite® 242 to the threads of the Shoulder Bolts (Item 5); then, install the new Compression Springs (Item 6) and Shoulder Bolts (Item 5) with new O-Rings Seals (Item 22).

29. Tighten the Shoulder Bolts (Item 5) to 205 In. Lbs. [23.1 Nm] torque.

30. Install the new Friction Facing (Item 4) and tighten the new Flat Head Machine Screws (Item 24) to 43 In. Lbs. [4.8 Nm] torque.

REASSEMBLY—PILOT, COUPLING, AND SHEAVE MOUNT

NOTE

The following sections are arranged by model. Verify that you are in the correct section for your model.

FWCB

⚠ CAUTION

Working with spring loaded or tension loaded fasteners and devices can cause injury. Wear safety glasses and take the appropriate safety precautions.

Refer to Figures 25 - 28.

1. Press the Brake Assembly onto the Hub (Item 1) and reinstall the Retaining Ring (Item 37).

2. Slide the Brake Friction Disc (Item 2) onto the Hub and install the Locking Nut (Item 26).

3. Reinstall and tighten the Set Screws (Item 29) to 20 In. Lbs. [2.2 Nm] torque.

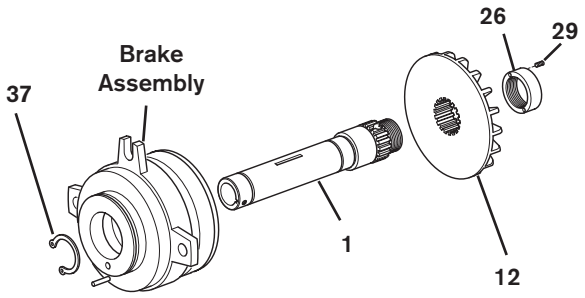

FIGURE 25

4. Lubricate the new O-Ring Seals (Items 19 and 21) with fresh O-Ring lubricant; then, install the new O-Rings Seals onto the Brake and Clutch Assemblies.

5. Reinstall the Key (Item 15).

6. Slide the Clutch Assembly onto the Hub (Item 1) and Key (Item 15).

7. Align the Spring Pin (Item 23) located on the Brake Assembly with the hole in the Clutch Assembly and press the Clutch Assembly onto the Hub (Item 1).

⚠ CAUTION

Working with spring loaded or tension loaded fasteners and devices can cause injury. Wear safety glasses and take the appropriate safety precautions.

8. Slide the Compression Spring (Item 11) onto the Hub (Item 1); then, pressing on the inner bearing race, press the Sheave or Drive Disc Assembly onto the Hub.

9. Reinstall the Retaining Ring (Item 37) and Hub Collar; then, reinstall the Set Screw (Item 47).

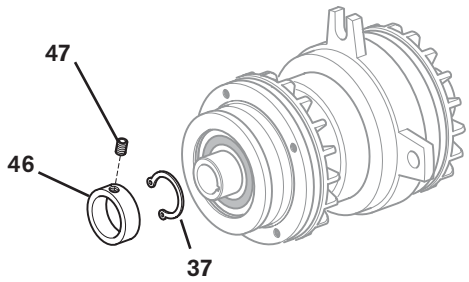

FIGURE 28

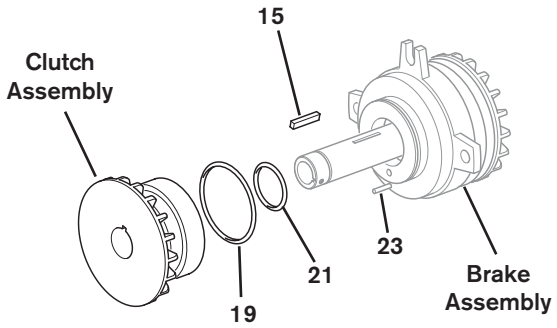

FIGURE 26

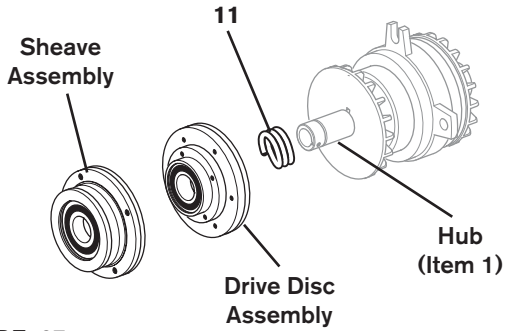

FIGURE 27

LWCB AND MWCB

Refer to Figures 29 & 30.

1. Fully supporting the inner bearing race, press the Hub (Item 1) into the Sheave or Drive Disc Assembly.

2. Slide the Compression Spring (Item 11) onto the Hub (Item 1); then, supporting the inner bearing race, press the Clutch Assembly onto the Hub (Item 1).

3. Lubricate the new O-Ring Seals (Items 19 and 21) with fresh O-Ring lubricant; then, install the new O-Ring Seals onto the Brake and Clutch Assemblies.

4. Align the Spring Pin (Item 23) located on the Brake Assembly with the hole in the Clutch Assembly and press the Brake Assembly onto the Hub (Item 1).

5. Slide the Spacer (Item 16) onto the Hub (Item 1); then, align the three holes in the Brake Friction Disc (Item 2) with the three holes in the Hub and slide the Brake Friction Disc (Item 2) onto the Hub.

6. Reinstall the Locking Nut (Item 26) and tighten the Set Screws (Item 29) to 20 In. Lbs. [2.2 Nm] torque for the LWCB and 35 In. Lbs. [3.9 Nm] torque for the MWCB.

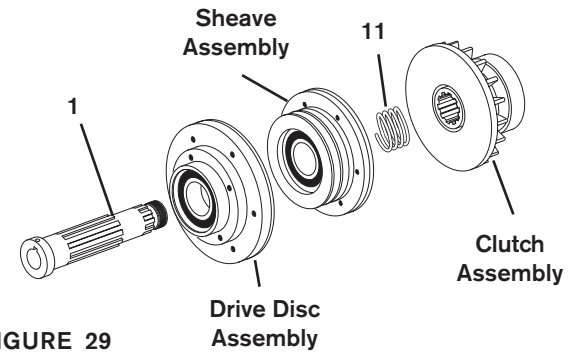

FIGURE 29

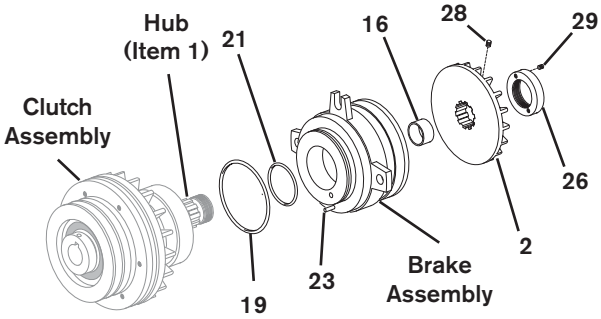

FIGURE 30

HWCB

Refer to Figures 31 & 32.

1. Fully supporting the inner bearing race, press the Hub (Item 43) into the Sheave of Drive Disc Assembly.

2. Slide the Compression Spring (Item 11) onto the Hub (Item 43); then, supporting the inner bearing race, press the Clutch Assembly onto the Hub (Item 43).

3. Lubricate the new O-Ring Seals (Items 19 and 21) with fresh O-Ring lubricant; then, install the new O-Rings Seals onto the Brake and Clutch Assemblies.

4. Align the Slotted Spring Pin (Item 23) located on the Brake Assembly with the hole in the Clutch Assembly and press the Brake Assembly onto the Hub (Item 43).

5. Slide the Spacer (Item 16) onto the Hub (Item 43); then, slide the Brake Friction Disc (Item 44) onto the Hub.

6. Align the two holes in the Locking Collar (Item 46) with the two holes in the Hub (Item 43); then, reinstall the Locking Collar and tighten the Socket Head Cap Screw (Item 47) to 100 In. Lbs. [11.3 Nm] torque.

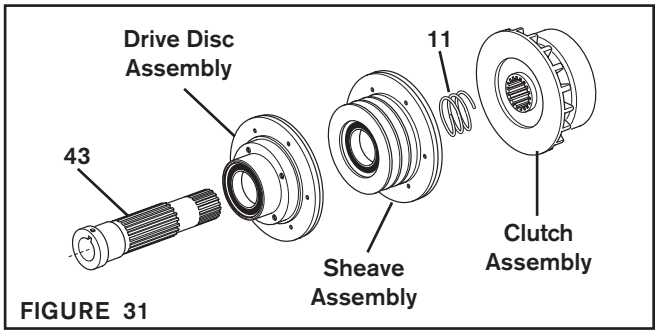

FIGURE 31

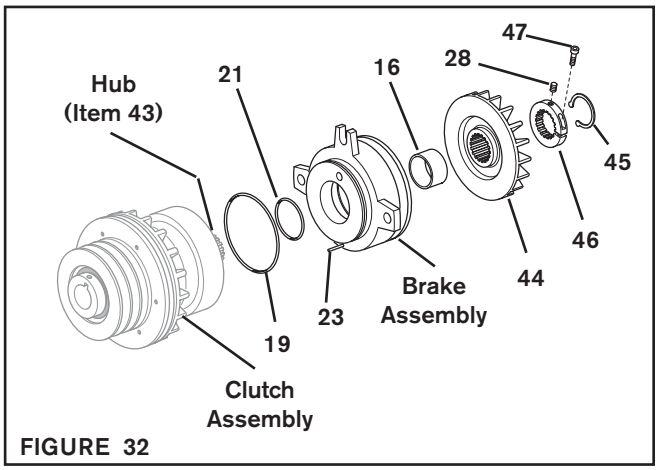

FIGURE 32

REPLACEMENT PARTS

The item or balloon number for all Nexen products is used for part identification on all product parts lists, product price lists, unit assembly drawings, bills of materials, and instruction manuals.

When ordering replacement parts, specify model designation, item number, part description, and quantity. Purchase replacement parts through your local Nexen Distributor.

FWCB–SHEAVE MOUNT

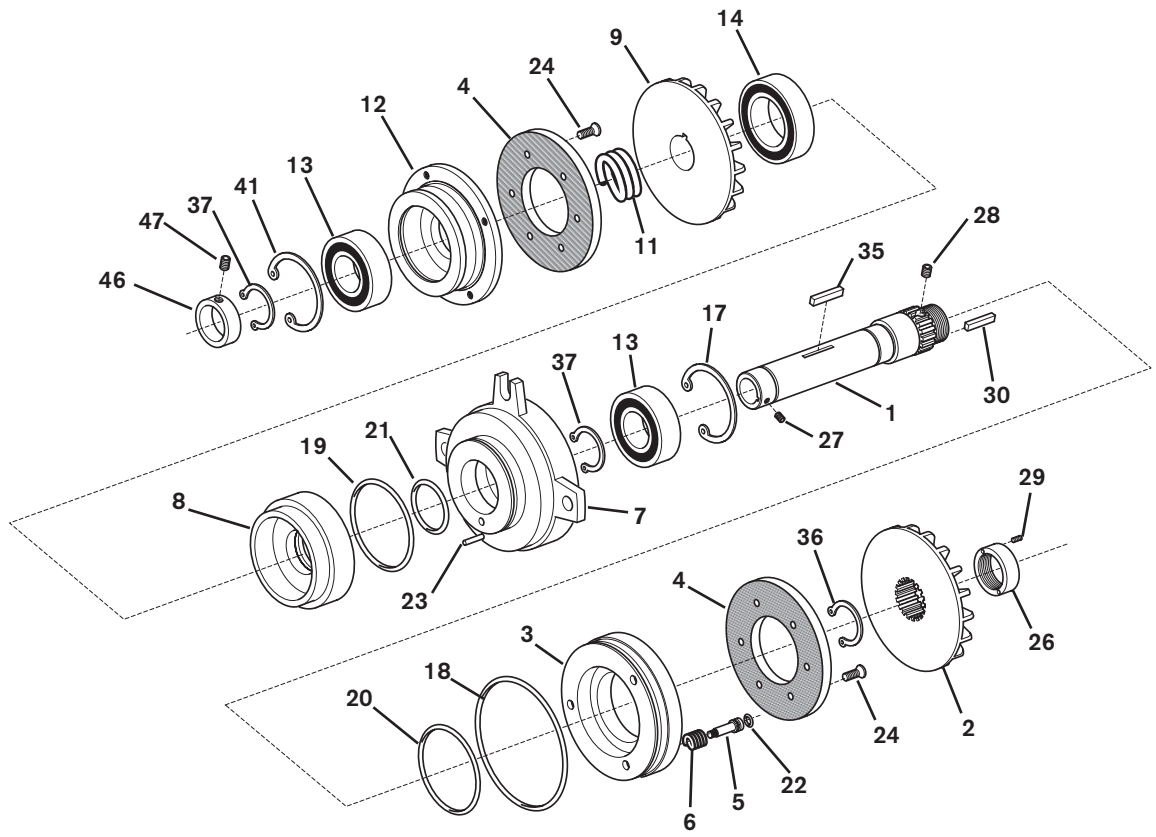

FIGURE 33

ITEM	DESCRIPTION	QTY
1	Hub	1
2	Friction Disc	1
3	Piston	1
4[1]	Friction Facing	2
5[1]	Shoulder Bolt	3
6[1]	Compression Spring	3
7	Piston Air Chamber	1
8	Air Chamber	1
9	Friction Disc	1
11[1]	Compression Spring	1
12	Sheave	1
13[1]	Ball Bearing	2
14[1]	Ball Bearing	1
17[1]	Retaining Ring (Int.)	1
18[1]	O-Ring Seal	1
19[1]	O-Ring Seal	1
20[1]	O-Ring Seal	1

ITEM	DESCRIPTION	QTY
21[1]	O-Ring Seal	1
22[1]	O-Ring Seal	3
23[1]	Slotted Spring Pin	1
24[1]	Flat Head Machine Screw	12
26	Locking Nut	1
27	Set Screw	1
28	Set Screw	3
29	Set Screw	2
30	Key	2
32	Air Line (Not Shown)	2
35[1]	Key	1
36[1]	Retaining Ring (Ext.)	1
37[1]	Retaining Ring (Ext.)	2
41	Retaining Ring (Int.)	1
46	Hub Collar	1
47	Set Screw	2

[1] **Denotes Repair Kit item.**
Repair Kit Product No. 847800.

NOTE

Repair Kit Product No. 847800 includes only one Ball Bearing (Item 13).

FWCB—PILOT AND COUPLING MOUNT

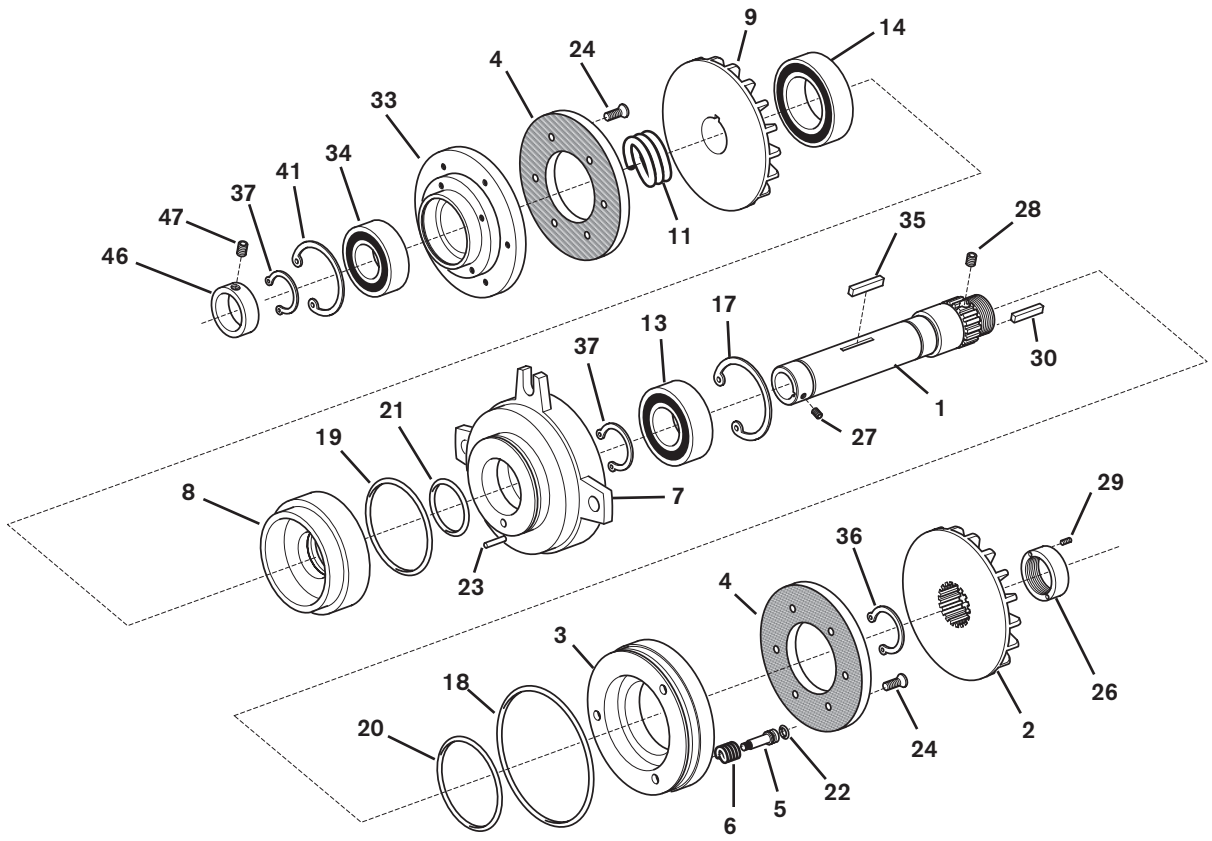

FIGURE 34

ITEM	DESCRIPTION	QTY
1	Hub	1
2	Friction Disc	1
3	Piston	1
4[1]	Friction Facing	2
5[1]	Shoulder Bolt	3
6[1]	Compression Spring	3
7	Piston Air Chamber	1
8	Air Chamber	1
9	Friction Disc	1
11[1]	Compression Spring	1
13[1]	Ball Bearing	1
14[1]	Ball Bearing	1
17[1]	Retaining Ring (Int.)	1
18[1]	O-Ring Seal	1
19[1]	O-Ring Seal	1
20[1]	O-Ring Seal	1
21[1]	O-Ring Seal	1

ITEM	DESCRIPTION	QTY
22[1]	O-Ring Seal	3
23[1]	Slotted Spring Pin	1
24[1]	Flat Head Machine Screw	12
26	Locking Nut	1
27	Set Screw	1
28	Set Screw	3
29	Set Screw	2
30	Key	2
32	Air Line (Not Shown)	2
33	Pilot Drive Disc	1
34	Ball Bearing	1
35[1]	Key	1
36[1]	Retaining Ring (Ext.)	1
37[1]	Retaining Ring (Ext.)	2
41	Retaining Ring (Int.)	1
46	Hub Collar	1
47	Set Screw	2

[1] **Denotes Repair Kit item.**
Repair Kit Product No. 847800.

LWCB–SHEAVE MOUNT

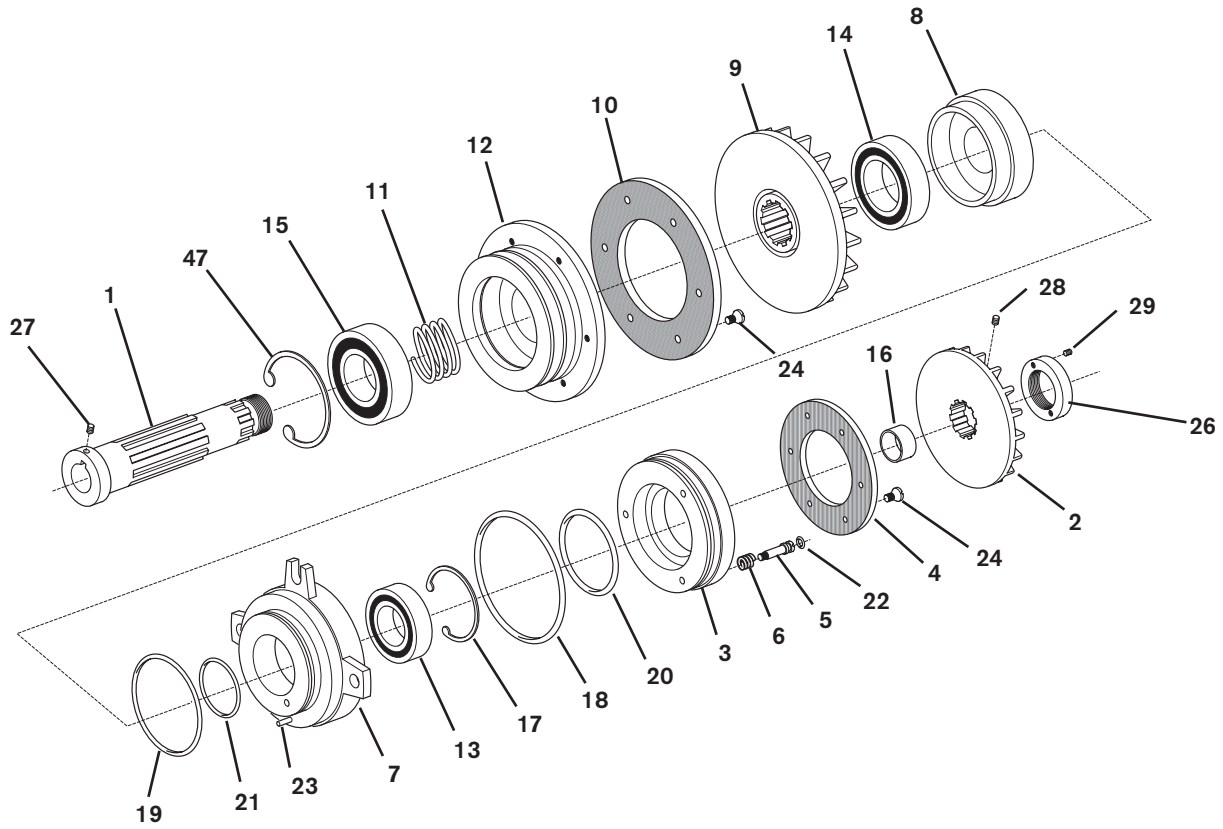

FIGURE 35

ITEM	DESCRIPTION	QTY
1	Hub	1
2	Friction Disc	1
3	Piston	1
4[1]	Friction Facing	1
5[1]	Shoulder Bolt	3
6[1]	Compression Spring	3
7	Piston Air Chamber	1
8	Air Chamber	1
9	Friction Disc	1
10[1]	Friction Facing	1
11[1]	Compression Spring	1
12	Sheave	1
13[1]	Ball Bearing	1
14[1]	Ball Bearing	1
15	Ball Bearing	1
16	Spacer	1

ITEM	DESCRIPTION	QTY
17[1]	Retaining Ring (Int.)	1
18[1]	O-Ring Seal	1
19[1]	O-Ring Seal	1
20[1]	O-Ring Seal	1
21[1]	O-Ring Seal	1
22[1]	O-Ring Seal	3
23[1]	Slotted Spring Pin	1
24[1]	Flat Head Machine Screw	12
26	Locking Nut	1
27	Set Screw	2
28	Set Screw	3
29	Set Screw	2
30	Key (Not Shown)	2
32	Air Line (Not Shown)	2
41	Retaining Ring (Int.)	1

[1] **Denotes Repair Kit item.**
Repair Kit Product No. 847900.

LWCB—PILOT AND COUPLING MOUNT

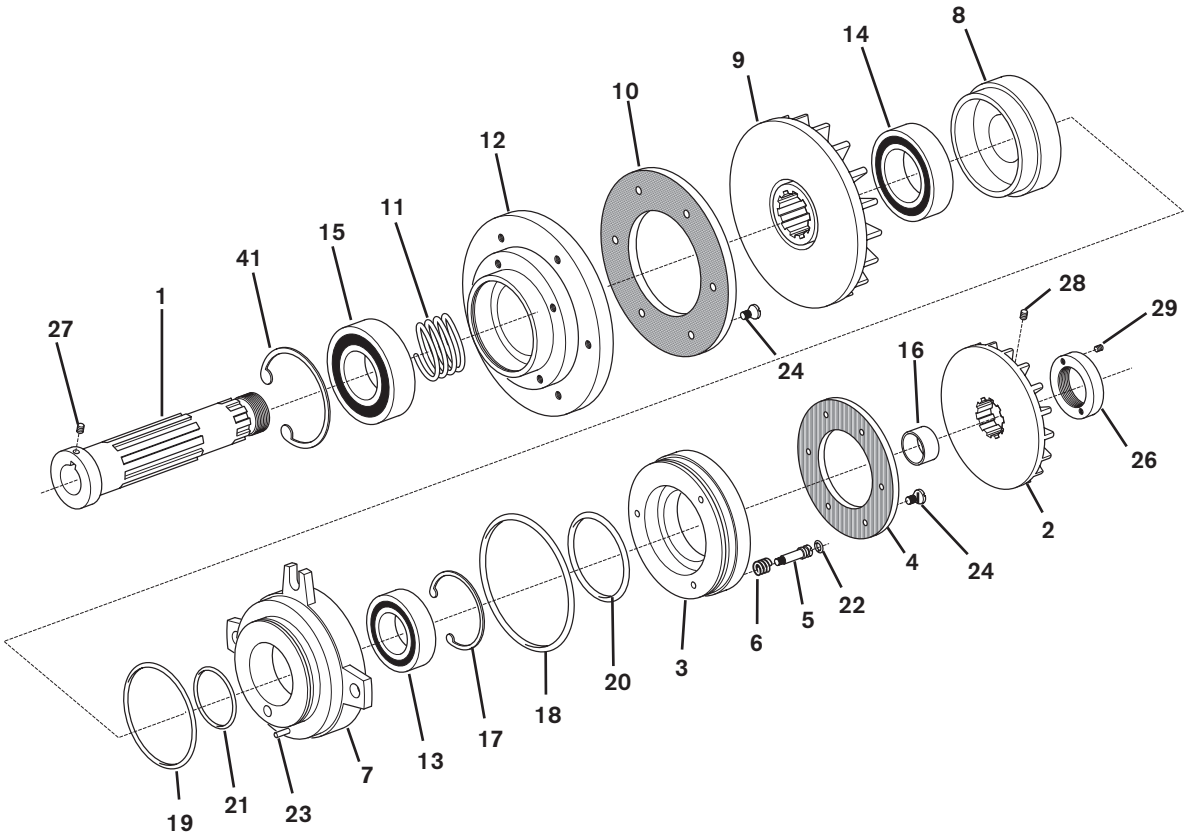

FIGURE 36

ITEM	DESCRIPTION	QTY
1	Hub	1
2	Friction Disc	1
3	Piston	1
4[1]	Friction Facing	1
5[1]	Shoulder Bolt	3
6[1]	Compression Spring	3
7	Piston Air Chamber	1
8	Air Chamber	1
9	Friction Disc	1
10[1]	Friction Facing	1
11[1]	Compression Spring	1
13[1]	Ball Bearing	1
14[1]	Ball Bearing	1
16	Spacer	1
17[1]	Retaining Ring (Int.)	1
18[1]	O-Ring Seal	1

ITEM	DESCRIPTION	QTY
19[1]	O-Ring Seal	1
20[1]	O-Ring Seal	1
21[1]	O-Ring Seal	1
22[1]	O-Ring Seal	3
23[1]	Slotted Spring Pin	1
24[1]	Flat Head Machine Screw	12
26	Locking Nut	1
27	Set Screw	2
28	Set Screw	3
29	Set Screw	2
30	Key (Not Shown)	2
32	Air Line (Not Shown)	2
12	Pilot Drive Disc	1
15	Ball Bearing	1
41	Retaining Ring (Int.)	1

[1] **Denotes Repair Kit item.**
Repair Kit Product No. 847900.

MWCB–SHEAVE MOUNT

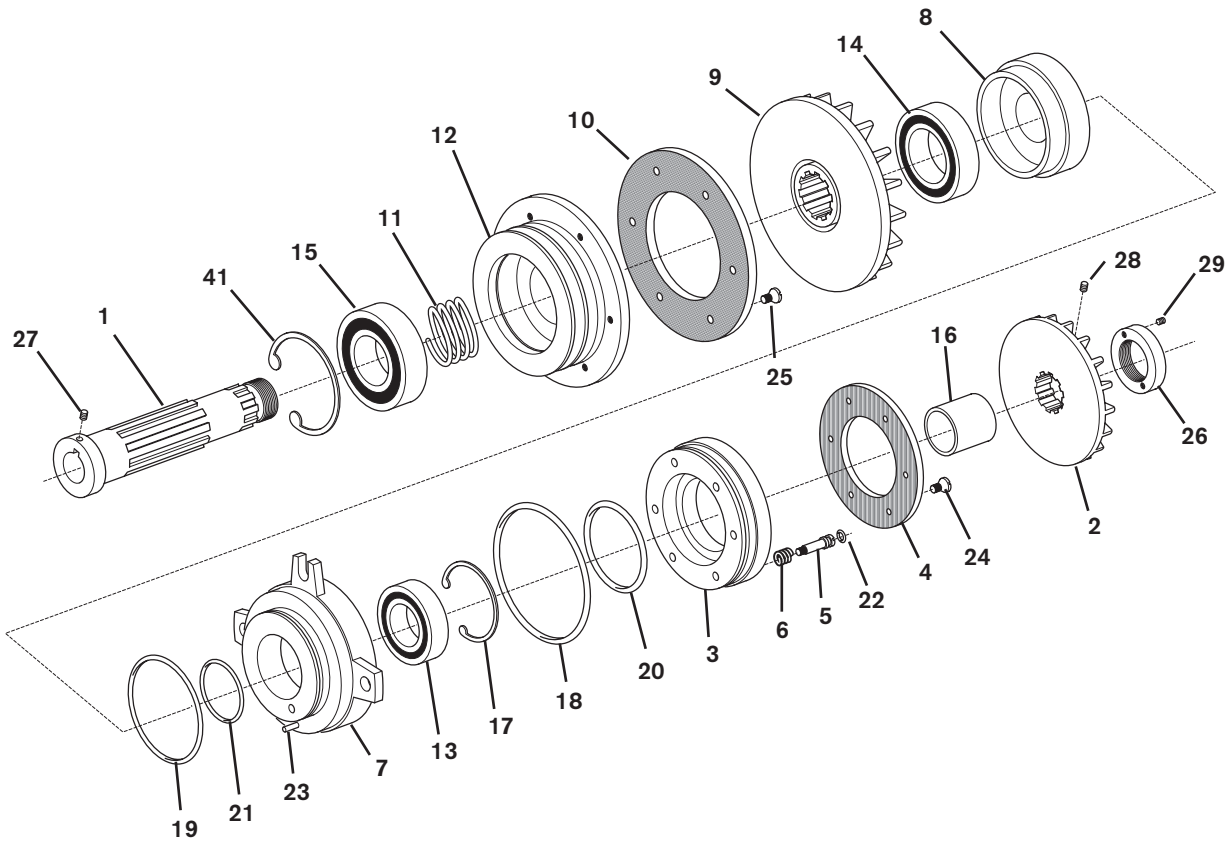

FIGURE 37

ITEM	DESCRIPTION	QTY
1	Hub	1
2	Friction Disc	1
3	Piston	1
4[1]	Friction Facing	1
5[1]	Shoulder Bolt	6
6[1]	Compression Spring	6
7	Piston Air Chamber	1
8	Air Chamber	1
9	Friction Disc	1
10[1]	Friction Facing	1
11[1]	Compression Spring	1
12	Sheave	1
13[1]	Ball Bearing	1
14[1]	Ball Bearing	1
15	Ball Bearing	1
16	Spacer	1

ITEM	DESCRIPTION	QTY
17[1]	Retaining Ring (Int.)	1
18[1]	O-Ring Seal	1
19[1]	O-Ring Seal	1
20[1]	O-Ring Seal	1
21[1]	O-Ring Seal	1
22[1]	O-Ring Seal	6
23[1]	Slotted Spring Pin	1
24[1]	Flat Head Machine Screw	6
25[1]	Flat Head Machine Screw	6
26	Locking Nut	1
27	Set Screw	2
28	Set Screw	3
29	Set Screw	2
30	Key (Not Shown)	2
32	Air Line (Not Shown)	2
41	Retaining Ring (Int.)	1

[1] **Denotes Repair Kit item.**
Repair Kit Product No. 848000.

MWCB—PILOT AND COUPLING MOUNT

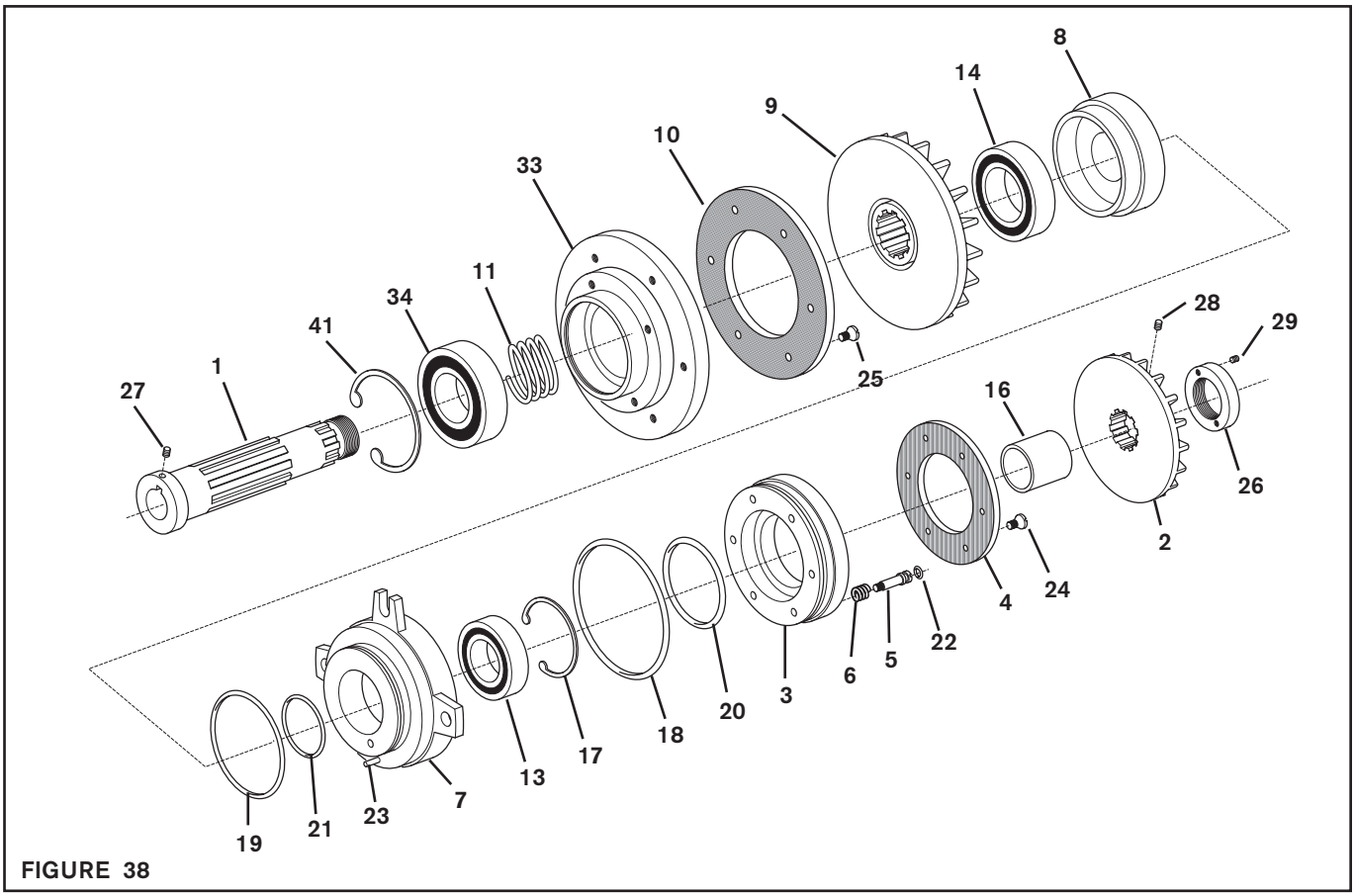

FIGURE 38

ITEM	DESCRIPTION	QTY
1	Hub	1
2	Friction Disc	1
3	Piston	1
4[1]	Friction Facing	1
5[1]	Shoulder Bolt	6
6[1]	Compression Spring	6
7	Piston Air Chamber	1
8	Air Chamber	1
9	Friction Disc	1
10[1]	Friction Facing	1
11[1]	Compression Spring	1
13[1]	Ball Bearing	1
14[1]	Ball Bearing	1
16	Spacer	1
17[1]	Retaining Ring (Int.)	1
18[1]	O-Ring Seal	1

ITEM	DESCRIPTION	QTY
19[1]	O-Ring Seal	1
20[1]	O-Ring Seal	1
21[1]	O-Ring Seal	1
22[1]	O-Ring Seal	6
23[1]	Slotted Spring Pin	1
24[1]	Flat Head Machine Screw	6
25[1]	Flat Head Machine Screw	6
26	Locking Nut	1
27	Set Screw	2
28	Set Screw	3
29	Set Screw	2
30	Key (Not Shown)	2
32	Air Line (Not Shown)	2
33	Pilot Drive Disc	1
34	Ball Bearing	1
41	Retaining Ring (Int.)	1

[1] **Denotes Repair Kit item.**
Repair Kit Product No. 848000.

HWCB–SHEAVE MOUNT

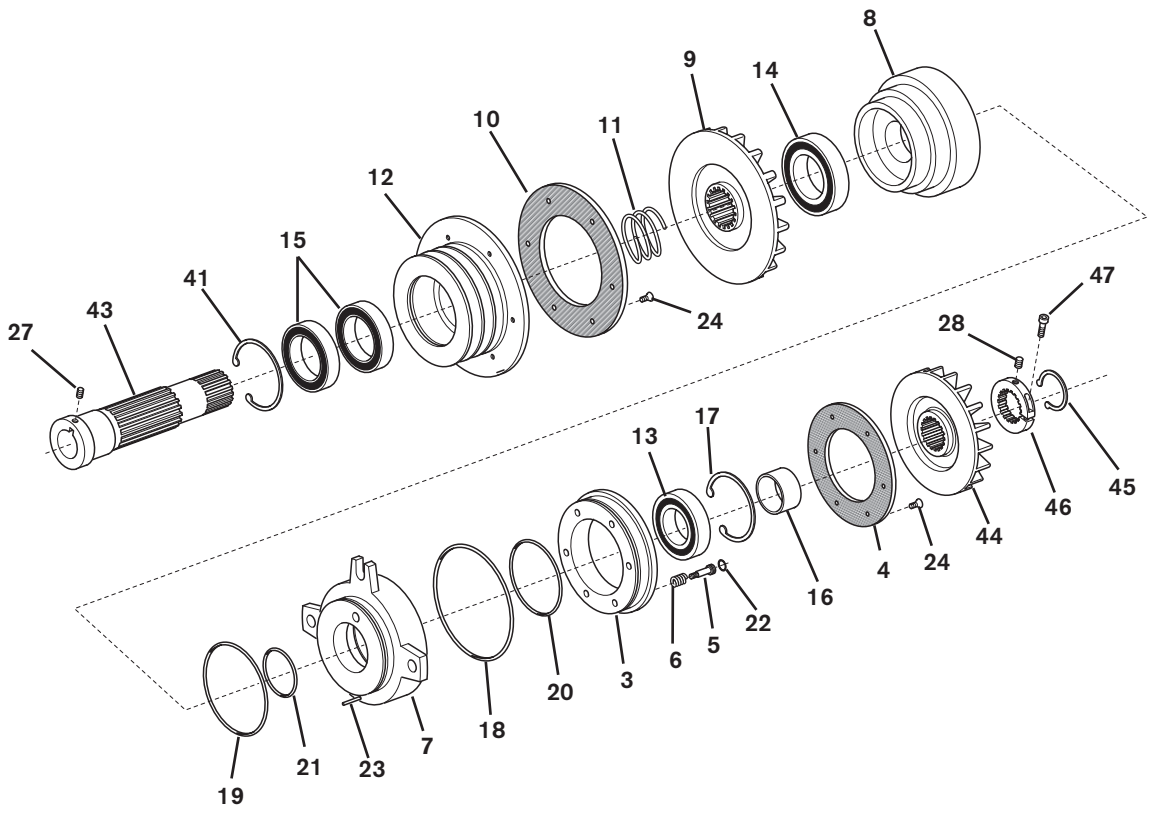

FIGURE 39

ITEM	DESCRIPTION	QTY
3	Piston	1
4[1]	Friction Facing	1
5[1]	Shoulder Bolt	6
6[1]	Compression Spring	6
7	Piston Air Chamber	1
8	Air Chamber	1
9	Friction Disc	1
10[1]	Friction Facing	1
11[1]	Compression Spring	1
12	Sheave	1
13[1]	Ball Bearing	1
14[1]	Ball Bearing	1
15	Ball Bearing	2
16	Spacer	1
17[1]	Retaining Ring (Int.)	1
18[1]	O-Ring Seal	1

ITEM	DESCRIPTION	QTY
19[1]	O-Ring Seal	1
20[1]	O-Ring Seal	1
21[1]	O-Ring Seal	1
22[1]	O-Ring Seal	6
23[1]	Slotted Spring Pin	1
24[1]	Flat Head Machine Screw	12
27	Set Screw	2
28	Set Screw	2
30	Key (Not Shown)	2
32	Air Line (Not Shown)	2
41	Retaining Ring (Int.)	1
43	Hub	1
44	Friction Disc	1
45[1]	Retaining Ring (Ext.)	1
46	Locking Collar	1
47	Socket Head Cap Screw	1

[1] **Denotes Repair Kit item.**
Repair Kit Product No. 848100.

HWCB—PILOT AND COUPLING MOUNT

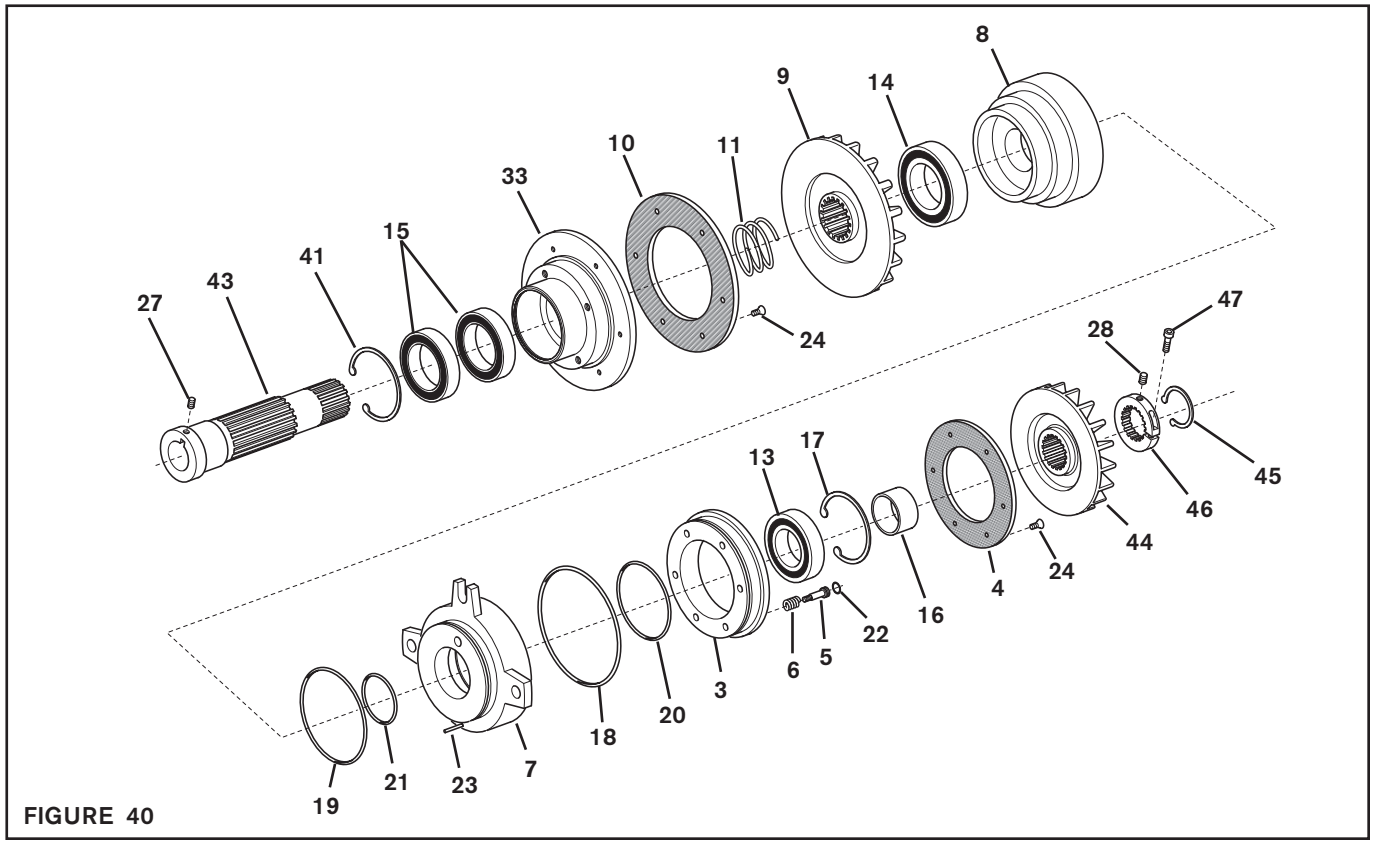

FIGURE 40

ITEM	DESCRIPTION	QTY
3	Piston	1
4[1]	Friction Facing	1
5[1]	Shoulder Bolt	6
6[1]	Compression Spring	6
7	Piston Air Chamber	1
8	Air Chamber	1
9	Friction Disc	1
10[1]	Friction Facing	1
11[1]	Compression Spring	1
13[1]	Ball Bearing	1
14[1]	Ball Bearing	1
15	Ball Bearing	2
16	Spacer	1
17[1]	Retaining Ring (Int.)	1
18[1]	O-Ring Seal	1
19[1]	O-Ring Seal	1

ITEM	DESCRIPTION	QTY
20[1]	O-Ring Seal	1
21[1]	O-Ring Seal	1
22[1]	O-Ring Seal	6
23[1]	Slotted Spring Pin	1
24[1]	Flat Head Machine Screw	12
27	Set Screw	2
28	Set Screw	2
30	Key (Not Shown)	2
32	Air Line (Not Shown)	2
33	Pilot Drive Disc	1
41	Retaining Ring (Int.)	1
43	Hub	1
44	Friction Disc	1
45[1]	Retaining Ring (Ext.)	1
46	Locking Collar	1
47	Socket Head Cap Screw	1

[1] **Denotes Repair Kit item. Repair Kit Product No. 848100.**

COUPLING

ITEM	DESCRIPTION	QTY
24	Adapter Plate	1
25	Flexible Ring	1
26	Coupling Hub	1
33	Cap Screw	4
34	Lock Washer	4

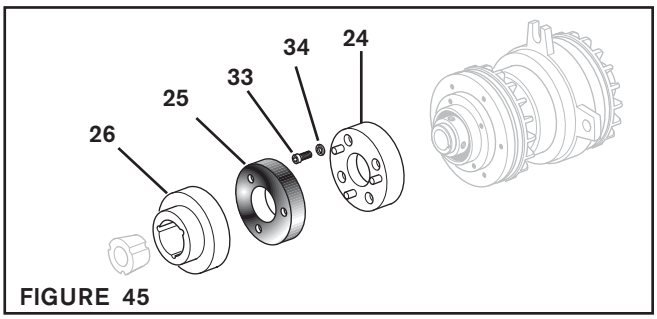

FIGURE 45

WARRANTY

Warranties
Nexen warrants that the Products will (a) be free from any defects in material or workmanship for a period of 12 months from the date of shipment, and (b) will meet and perform in accordance with the specifications in any engineering drawing specifically for the Product that is in Nexen's current product catalogue, or that is accessible at the Nexen website, or that is attached to this Quotation and that specifically refers to this Quotation by its number, subject in all cases to any limitations and exclusions set out in the drawing. NEXEN MAKES NO OTHER WARRANTY, EXPRESS OR IMPLIED, AND ALL IMPLIED WARRANTIES, INCLUDING WITHOUT LIMITATION, IMPLIED WARRANTIES OF MERCHANTABILITY AND FITNESS FOR A PARTICULAR PURPOSE ARE HEREBY DISCLAIMED. This warranty applies only if: (a) the Product has been installed, used and maintained in accordance with any applicable Nexen installation or maintenance manual for the Product; (b) the alleged defect is not attributable to normal wear and tear; (c) the Product has not been altered, misused or used for purposes other than those for which it was intended; and (d) Buyer has given written notice of the alleged defect to Nexen, and delivered the allegedly defective Product to Nexen, within one year of the date of shipment.

Exclusive Remedy
The exclusive remedy for the Buyer for any breach of any warranties provided in connection with this agreement will be, at the election of Nexen: (a) repair or replacement with new, serviceably used, or reconditioned parts or products; or (b) issuance of credit in the amount of the purchase price paid to Nexen by the Buyer for the Products.

Agent's Authority
Buyer agrees that no agent, employee or representative of Nexen has authority to bind Nexen to any affirmation, representation, or warranty concerning the Products other than those warranties expressly set forth herein.

Limitation on Nexen's Liability
TO THE EXTENT PERMITTED BY LAW NEXEN SHALL HAVE NO LIABILITY TO BUYER OR ANY OTHER PERSON FOR INCIDENTAL DAMAGES, SPECIAL DAMAGES, CONSEQUENTIAL DAMAGES OR OTHER DAMAGES OF ANY KIND OR NATURE WHATSOEVER, WHETHER ARISING OUT OF BREACH OF WARRANTY OR OTHER BREACH OF CONTRACT, NEGLIGENCE OR OTHER TORT, OR OTHERWISE, EVEN IF NEXEN SHALL HAVE BEEN ADVISED OF THE POSSIBILITY OR LIKELIHOOD OF SUCH POTENTIAL LOSS OR DAMAGE. For all of the purposes hereof, the term "consequential damages" shall include lost profits, penalties, delay damages, liquidated damages or other damages and liabilities which Buyer shall be obligated to pay or which Buyer may incur based upon, related to or arising out of its contracts with its customers or other third parties. In no event shall Nexen be liable for any amount of damages in excess of amounts paid by Buyer for Products or services as to which a breach of contract has been determined to exist. The parties expressly agree that the price for the Products and the services was determined in consideration of the limitation on damages set forth herein and such limitation has been specifically bargained for and constitutes an agreed allocation of risk which shall survive the determination of any court of competent jurisdiction that any remedy herein fails of its essential purpose.

Inspection
Buyer shall inspect all shipments of Products upon arrival and shall notify Nexen in writing, of any shortages or other failures to conform to these terms and conditions which are reasonably discoverable upon arrival without opening any carton or box in which the Products are contained. Such notice shall be sent within 14 days following arrival. All notifications shall be accompanied by packing slips, inspection reports and other documents necessary to support Buyer's claims. In addition to the foregoing obligations, in the event that Buyer receives Products that Buyer did not order, Buyer shall return the erroneously shipped Products to Nexen within thirty (30) days of the date of the invoice for such Products; Nexen will pay reasonable freight charges for the timely return of the erroneously shipped Products, and issue a credit to Buyer for the returned Products at the price Buyer paid for them, including any shipping expenses that Nexen charged Buyer. All shortages, overages and nonconformities not reported to Nexen as required by this section will be deemed waived.

Limitation on Actions
No action, regardless of form, arising out of any transaction to which these terms and conditions are applicable may be brought by the Buyer more than one year after the cause of action has accrued.

nexen®

Nexen Group, Inc.
560 Oak Grove Parkway
Vadnais Heights, MN 55127

800.843.7445
Fax: 651.286.1099
www.nexengroup.com

ISO 9001 Certified